EMES®



Standard
Machine Components

2026 Catalogue

www.emesteker.com



ABOUT US

EMES A.S. was establlshed as a multl-partner flrm In 1998 by well-known traders who have been dolng buslness In the world markets. In short tlme, the company became a strong trademark and made an appearance both In domestlc and forelgn markets. It has attalned a hlgh quallty In the productlon and Increased the standard product klnds to more than 8.000 to date. Thls wat the company became more competltlve not only country-wlde but also worldwlde. EMES A.S., wlth lts dynamlc and self-renewlng nature has determlned lts vlslon to be the most preferred and rellable trademark globally, and to export mostly to the European countrles and subsequently to more than 65 countrles of Mlddle East, Afrlca, Balkans and Mlddle Asla.

EMES A.S. works taklng lnto conslderatlon the prlnclple of “absolute customer satlsfactlon” whlch ls part of the quallty pollcy of the company thanks to lts well-tralned technlcal staff a modern faclllty of 9.000 sqm^2 covered area. The company has arranged speclal human resource wlth a hlghly creatlve team by malntalnlng an Internatlonally recognlsed quallty standart. It ls the flrst company In Turkey whlch has the Certlflcate of DIN EN ISO 9001:2015. Our mlsslon ls to offer more rellable, hlgh quallty and aesthetlc deslgned products to our customers, and to follow the developments and lnnovatlons In the sector for maklng them part of our quallty pollcy. We strlve to provlde our domestlc and Internatlonal of our quallty pollcy. We strlve to provlde our domestlc and Internatlonal customers wlth the best products and servlces whlch reflect the “**Made In Türkiye**” quallty, and help them flnd the most sultable solutlons for thelr needs.

INDEX

KKA 10


IA 11


KKAB 12


IAB 12


MDAI 12


MDA 13


MDAS 14


MDASc 14


MAS 15


DA 15


SA 16


SAı 16


MAM 17


MAIM 18


KT/KTs 19
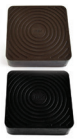

PAM 20-21


PAMZB 21


PAIM 22


PAIMZB 22


PAMB 23


PAMBZB 23


PAMD 24-25


PAIMD 26


PMA 27


PRA/PRAB 28-29


PRd/PRk 29


PAS/PAIS 30


PPA 30


HIA 30


HIAZB 31


HPAIMZB 32

New Product

HPAIMD 32

New Product

MAMR 33

New Product

MAIMR 34


MAMB 35


MAMBR 36


PAMYZB 37


SAYZBR/SAİYZBR 38


SAYZB/SAİYZB 39


AC3/PC/DC 40


AC/ACt/ACp 41

ACKK/ACKKt/PCKK 42

IPP/PIPP 43

PDK/PDKK 43

CDKK/KKCK 44

DK 44

PT1 45

PTB1/PTB1P 45

INDEX

PT/PTt/PTk 46


BT/AT 47


MTs/AT 48


ZTk/ZTs 49


PGT/PGT 1-2 50


KTd/KTk 51
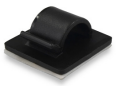

PKC/PKB 52-53


PKCI/PKBI 54


PKCt/PKBt 55


PKCIt/PKBIt 56


AKCt/AKBt 57


AKC/AKB 58


PYCt/PYBt 59


PYC/PYB 60


PYCk/PYBk 61


PYCP/PYBP 62


PYCPt/PYBPt 63


PYCPk/PYBPk 64


PETEKB/PETEKC 65


PTB2 66


PTC2 66


PTC3/PTB3 67


PTB3D 67


PTC4/PTB4 68


PTB4d/PTB6d 69


PTC6/PTB6 70


ATB4/ATC4 71


ATB4p/ATC4p 72


PTBy/BTB 73


BKB/BKC 74


BYB/BYC 75


BSB/BSC 76


BTVB/ BTVC 77


BTV/BTVBb 77-78


BDV 78


BKV 78


IM/SIM 79
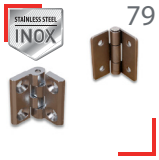

PM 80


ZMb/ZMk 80
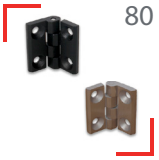

ZMCk 81


PMC 81

ZMCb 81

New Product

SMb 81

SMb/SMk 82

MI 83

DI 83

M 83

D 83

INDEX

YPKk/YPKb 84


YPKp/YPK2 84-85


YPK3/YPK4 85


SRK 86


SKK 87


YDKb 88


YDKk 88
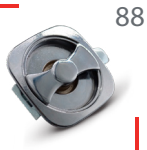

TCBp 89
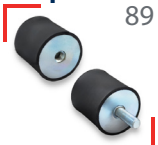

TCCp/TBBp 90-91


TCp/TBp 92-93


TKCP 94


TMCCp 94


TCCd 94


YT 95


KT2 95


GCBD 96


GD 96


G45 97


G90 97


BC 98


KMM 99


TELESCOPIC RAIL 100-101


Product Coding



P Plastic	A Aluminium	S Cylinder	D Rotary	M Trunnion	S Sac	Y Spring	G Buried
R Rotil	B Bushing	T Mace	G Greasing	M Articulation	M Hinge	P Pano	P Pinion
A Foot	C Bolt	T Clawed	İ Indexing	M Metal	T Wedge	Z Zamac	B Curved
K Lock	Ç Impeller	V Volant	P Piston	I Inox	P Scaly	D Casting	K Square
S Foot	K Arm	Y Leaf	P Pim	B Painted	K Conical	K Rubber	D Rectangle
	P Polishing	A Key	K Chromium	S Fixed	M Reel	K Cable	P Rice
	T Handle	B Connection	K Coated	M Machine	Y Fire	Z Floor	D Hole
	B Bakelite	Ç Fork	T Base	D Balance	D Cabinet	B Vineyard	Y Round
	K Butterfly	Ç Steel	K Global	Ç Zinc	K Lock	B Connected	Y Clover

NEW PRODUCT



FLOOR BLOCK

MADE IN TÜRKİYE MADE IN

www.emesteker.com

NEW PRODUCT



AIR CONDITIONING BRACKET

MADE IN TÜRKİYE MADE IN

www.emesteker.com

KKA

CHROMIUM PLATED FEET



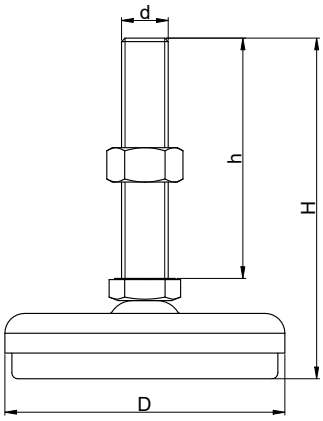

Product Code	D	d	h	H	Sw	Kg	Pckg
KKA 40 08 50	40	M8	50	80	11	200	4
KKA 40 08 90	40	M8	90	120	11	200	4
KKA 40 10 50	40	M10	50	76	13	200	4
KKA 40 10 70	40	M10	70	96	13	200	4
KKA 40 10 10	40	M10	100	128	13	200	4
KKA 40 10 15	40	M10	150	177	13	200	4
KKA 40 12 50	40	M12	50	77	17	200	4
KKA 40 12 70	40	M12	70	98	17	200	4
KKA 40 12 10	40	M12	100	128	17	200	4
KKA 40 12 15	40	M12	150	178	17	200	4
KKA 40 16 10	40	M16	100	130	19	200	4
KKA 60 08 50	60	M8	50	84	11	250	4
KKA 60 08 90	60	M8	90	124	11	250	4
KKA 60 10 50	60	M10	50	81	13	250	4
KKA 60 10 70	60	M10	70	103	13	250	4
KKA 60 10 10	60	M10	100	131	13	250	4
KKA 60 10 15	60	M10	150	181	13	250	4
KKA 60 12 50	60	M12	50	82	17	300	4
KKA 60 12 70	60	M12	70	102	17	300	4
KKA 60 12 10	60	M12	100	133	17	300	4
KKA 60 12 15	60	M12	150	183	17	300	4
KKA 60 16 10	60	M16	100	135	19	400	4
KKA 80 12 70	80	M12	70	106	17	400	4
KKA 80 12 10	80	M12	100	136	17	400	4
KKA 80 12 15	80	M12	150	186	17	400	4
KKA 80 16 10	80	M16	100	140	19	500	4
KKA 80 16 15	80	M16	150	190	19	500	4
KKA 80 20 10	80	M20	100	146	22	600	4
KKA 80 20 15	80	M20	150	191	22	600	4
KKA 10 12 70	100	M12	70	105	17	350	4
KKA 10 10 10	100	M10	100	146	13	350	4
KKA 10 12 10	100	M12	100	135	17	350	4
KKA 10 12 15	100	M12	150	185	17	350	4
KKA 10 16 10	100	M16	100	138	19	600	4
KKA 10 16 15	100	M16	150	189	19	600	4
KKA 10 20 10	100	M20	100	145	22	800	4
KKA 10 20 15	100	M20	150	190	22	800	4
KKA 12 12 70	120	M12	70	110	17	600	4
KKA 12 12 10	120	M12	100	140	17	600	4
KKA 12 12 15	120	M12	150	190	17	600	4
KKA 12 16 10	120	M16	100	145	19	800	4
KKA 12 16 15	120	M16	150	195	19	800	4
KKA 12 20 10	120	M20	100	150	22	1000	4
KKA 12 20 15	120	M20	150	195	22	1000	4
KKA 16 16 10	160	M16	100	157	19	1200	1
KKA 16 16 15	160	M16	150	212	19	1200	1
KKA 16 20 10	160	M20	100	163	22	1200	1
KKA 16 20 15	160	M20	150	207	22	1200	1

Rubber

Product Code	D	Pckg
KKA 040 Rubber	40	100
KKA 060 Rubber	60	40
KKA 080 Rubber	80	20
KKA 100 Rubber	100	15
KKA 120 Rubber	120	10

KKA RUBBER serles can also be used In **IA**, **IAB** and **KKA** products.

IA CHROMIUM PLATED INOX FEET



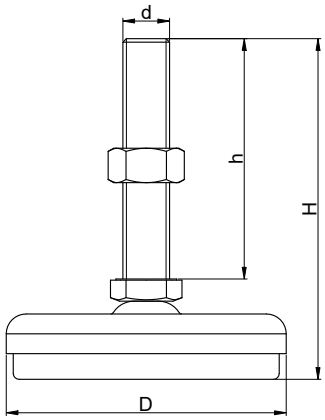

Product Code	D	d	h	H	Sw	Kg	Pckg
IA 40 10 70	40	M10	70	91	13	200	4
IA 40 10 10	40	M10	100	121	13	200	4
IA 40 10 15	40	M10	150	171	13	200	4
IA 40 12 70	40	M12	70	91	13	200	4
IA 40 12 10	40	M12	100	121	13	200	4
IA 40 12 15	40	M12	150	171	13	200	4
IA 40 16 10	40	M16	100	121	13	200	4
IA 60 10 70	60	M10	70	103	13	250	4
IA 60 10 10	60	M10	100	133	13	250	4
IA 60 10 15	60	M10	150	183	13	250	4
IA 60 12 70	60	M12	70	103	17	300	4
IA 60 12 10	60	M12	100	133	17	300	4
IA 60 12 15	60	M12	150	183	17	300	4
IA 60 16 10	60	M16	100	133	19	400	4
IA 80 12 70	80	M12	70	116	17	400	4
IA 80 12 10	80	M12	100	146	17	400	4
IA 80 12 15	80	M12	150	196	17	400	4
IA 80 16 10	80	M16	100	146	19	500	4
IA 80 16 15	80	M16	150	196	19	500	4
IA 80 20 10	80	M20	100	146	22	600	4
IA 80 20 15	80	M20	150	196	22	600	4
IA 10 12 70	100	M12	70	116	17	350	4
IA 10 12 10	100	M12	100	146	17	350	4
IA 10 12 15	100	M12	150	196	17	350	4
IA 10 16 10	100	M16	100	146	19	600	4
IA 10 16 15	100	M16	150	196	19	600	4
IA 10 20 10	100	M20	100	146	22	800	4
IA 10 20 15	100	M20	150	196	22	800	4
IA 12 12 70	120	M12	70	116	17	600	4
IA 12 12 10	120	M12	100	146	17	600	4
IA 12 12 15	120	M12	150	196	17	600	4
IA 12 16 10	120	M16	100	146	19	800	4
IA 12 16 15	120	M16	150	196	19	800	4
IA 12 20 10	120	M20	100	146	22	1000	4
IA 12 20 15	120	M20	150	196	22	1000	4
IA 16 16 10	160	M16	100	164	19	1200	1
IA 16 16 15	160	M16	150	214	19	1200	1
IA 16 20 10	160	M20	100	164	22	1200	1
IA 16 20 15	160	M20	150	214	22	1200	1

KKAB CHROMIUM - PLATED FEET



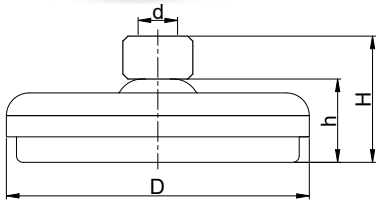

Product Code	D	d	h	H	Sw	Kg	Pckg
KKAB 60 10	60	M10	26	43	24	400	4
KKAB 60 12	60	M12	26	43	24	400	4
KKAB 60 16	60	M16	26	43	24	400	4
KKAB 80 10	80	M10	29	46	24	600	4
KKAB 80 12	80	M12	29	46	24	600	4
KKAB 80 16	80	M16	28	45	24	600	4
KKAB 10 10	100	M10	29	46	24	800	4
KKAB 10 12	100	M12	29	46	24	800	4
KKAB 10 16	100	M16	29	46	24	800	4
KKAB 12 10	120	M10	34	51	24	1000	4
KKAB 12 12	120	M12	34	51	24	1000	4
KKAB 12 16	120	M16	34	51	24	1000	4

IAB INOX FEET BUSHED



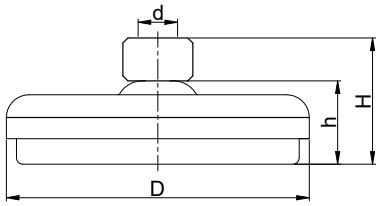

Product Code	D	d	h	H	Sw	Kg	Pckg
IAB 60 10	60	M10	26	43	24	400	4
IAB 60 12	60	M12	26	43	24	400	4
IAB 60 16	60	M16	26	43	24	400	4
IAB 80 10	80	M10	29	46	24	600	4
IAB 80 12	80	M12	29	46	24	600	4
IAB 80 16	80	M16	29	46	24	600	4
IAB 10 10	100	M10	29	46	24	800	4
IAB 10 12	100	M12	29	46	24	800	4
IAB 10 16	100	M16	29	46	24	800	4
IAB 12 10	120	M10	34	51	24	1000	4
IAB 12 12	120	M12	34	51	24	1000	4
IAB 12 16	120	M16	34	51	24	1000	4

MDAI MACHINE LEVELLING FEET INOX



Product Code	D	d	L	H	Kg	Mfs	Pckg
MDAI 12 16 12 D	120	M16x2	120	165	1000	12	1

Speclal dlmenslons are avallable upon request.

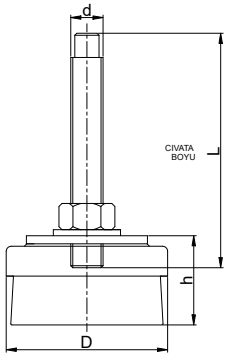

MDA MACHINE LEVELLING FEET



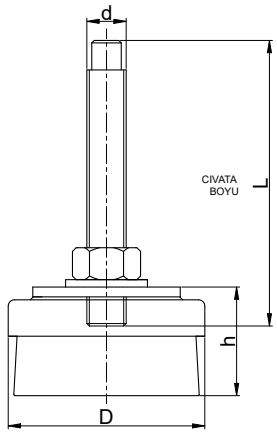

Thread Size
A: 1,25 B: 1,50 C: 1,75 D: 2,00 E: 2,50 F: 3,00 G: 3,50

Product Code	D	d	L	Kg	M	Pckg
MDA 80 10 10 B	80	M10x1,5	100	500	12	4
MDA 80 12 12 A	80	M12x1,25	120	500	12	4
MDA 80 16 12 B	80	M16x1,5	120	500	12	4
MDA 80 16 12 D	80	M16x2	120	500	12	4
MDA 12 10 10 B	120	M10x1,5	100	1000	12	1
MDA 12 12 12 A	120	M12x1,25	120	1000	12	1
MDA 12 16 12 B	120	M16x1,5	120	1000	12	1
MDA 12 16 12 D	120	M16x2	120	1000	12	1
MDA 16 16 12 B	160	M16x1,5	120	2000	15	1
MDA 16 16 12 D	160	M16x2	120	2000	15	1
MDA 16 20 17 B	160	M20x1,5	170	2000	15	1
MDA 16 20 17 E	160	M20x2,5	170	2000	15	1
MDA 20 20 17 B	200	M20x1,5	170	5000	25	1
MDA 20 20 17 E	200	M20x2,5	170	5000	25	1
MDA 20 24 17 F	200	M24x3	170	5000	25	1
MDA 20 30 17 F	200	M30x3	170	5000	25	1
MDA 24 20 17 B	240	M20x1,5	170	7000	25	1
MDA 24 20 17 E	240	M20x2,5	170	7000	25	1
MDA 24 24 17 F	240	M24x3	170	8000	25	1
MDA 24 30 17 F	240	M30x3	170	9000	25	1

MDA MACHINE LEVELLING FEET WITHOUT SCREW



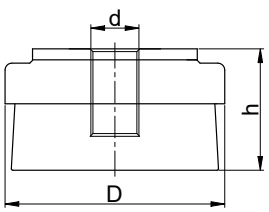

Product Code	D	d	h	Kg	Pckg
MDA 80 10 B	80	M10x1,5	45	500	4
MDA 80 12 A	80	M12x1,25	45	500	4
MDA 80 16 B	80	M16x1,5	45	500	4
MDA 80 16 D	80	M16x2	45	500	4
MDA 12 10 B	120	M10x1,5	45	1000	4
MDA 12 12 A	120	M12x1,25	45	1000	4
MDA 12 16 B	120	M16x1,5	45	1000	4
MDA 12 16 D	120	M16x2	45	1000	4
MDA 16 16 B	160	M16x1,5	55	2000	1
MDA 16 16 D	160	M16x2	55	2000	1
MDA 16 20 B	160	M20x1,5	55	2000	1
MDA 16 20 E	160	M20x2,5	55	2000	1
MDA 20 20 B	200	M20x1,5	55	5000	1
MDA 20 20 E	200	M20x2,5	55	5000	1
MDA 20 24 F	200	M24x3	55	5000	1
MDA 20 30 F	200	M30x3	55	5000	1
MDA 24 20 B	240	M20x1,5	65	7000	1
MDA 24 20 E	240	M20x2,5	65	7000	1
MDA 24 24 F	240	M24x3	65	7000	1
MDA 24 30 F	240	M30x3	65	7000	1

MDAS

MACHINE LEVELLING FIXED FEET



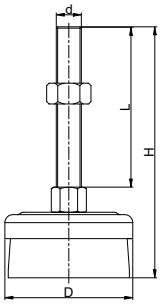

Product Code	D	d	L	H	Kg	Pckg
MDAS 80 16 10	80	M16	100	156	600	4
MDAS 80 16 15	80	M16	150	206	800	4
MDAS 12 16 10	120	M16	100	158	1000	1
MDAS 12 16 15	120	M16	150	208	1200	1
MDAS 12 20 10	120	M20	100	158	1200	1
MDAS 12 20 15	120	M20	150	208	1400	1
MDAS 16 16 10	160	M16	100	164	2000	1
MDAS 16 16 15	160	M16	150	214	2200	1
MDAS 16 20 10	160	M20	100	164	2200	1
MDAS 16 20 15	160	M20	150	214	2400	1
MDAS 16 24 15	160	M24	150	214	2800	1
MDAS 20 20 10	200	M20	100	219	3000	1
MDAS 20 20 15	200	M20	150	219	3200	1
MDAS 20 24 15	200	M24	150	219	3600	1

MDASc

MACHINE LEVELLING FIXED FEET / ZInc



Product Code	D	d	L	H	Kg	Pckg
MDASc 80 16 10	80	M16	100	156	600	4
MDASc 80 16 15	80	M16	150	206	800	4
MDASc 12 16 10	120	M16	100	158	1000	1
MDASc 12 16 15	120	M16	150	208	1200	1
MDASc 12 20 10	120	M20	100	158	1200	1
MDASc 12 20 15	160	M20	150	208	1400	1
MDASc 16 16 10	160	M16	100	164	2000	1
MDASc 16 16 15	160	M16	150	214	2200	1
MDASc 16 20 10	160	M20	100	164	2200	1
MDASc 16 20 15	160	M20	150	214	2400	1
MDASc 16 24 15	200	M24	150	214	2800	1
MDASc 20 20 10	200	M20	100	219	3000	1
MDASc 20 20 15	200	M20	150	219	3200	1
MDASc 20 24 15	200	M24	150	219	3600	1

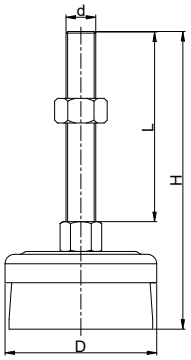

Rubber

Product Code	D	Pckg
MDA 080 Rubber	80	10
MDA 120 Rubber	120	8
MDA 160 Rubber	160	2
MDA 200 Rubber	200	2
MDA 240 Rubber	240	1

MDA rubber serles can also be used In **MDAS**, **MDAI** and **MDASc** products.

MAS METAL FIXED FEET



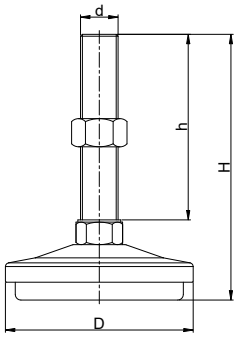

Product Code	D	d	h	H	Sw	Kg	Pckg
MAS 60 16 10	60	M16	100	132	22	900	4
MAS 60 16 15	60	M16	150	182	22	900	4
MAS 80 16 10	80	M16	100	132	19	900	4
MAS 80 16 15	80	M16	150	182	19	900	4
MAS 80 20 10	80	M20	100	132	22	1200	4
MAS 80 20 15	80	M20	150	182	22	1200	4
MAS 10 16 10	100	M16	100	132	19	1200	4
MAS 10 16 15	100	M16	150	182	19	1200	4
MAS 10 20 10	100	M20	100	140	22	1500	4
MAS 10 20 15	100	M20	150	182	22	1500	4
MAS 10 24 15	100	M24	150	190	27	1500	4

Rubber

Product Code	D	Pckg
MAS 060 Rubber	60	100
MAS 080 Rubber	80	100
MAS 100 Rubber	100	100

MAS rubber serles can also be used In **MAM** and **MAIM** products.

DA CAST IRON FEET



Product Code	D	d	h	Kg	Pckg
DA 100 16 100	100	M16x1,5	100	750	4
DA 140 16 100	140	M16x1,5	100	1500	2
DA 160 20 100	160	M20x1,5	100	2500	2

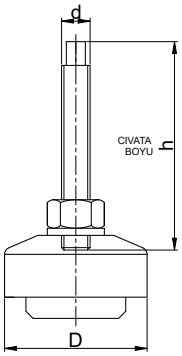

SA STEEL SHEET FEET



Product Code	D	d	h	H	Sw	Kg	Pckg
SA 10 12 90	100	M12	90	116	17	450	8
SA 10 16 10	100	M16	100	126	24	550	8
SA 10 20 15	100	M20	150	176	24	700	8

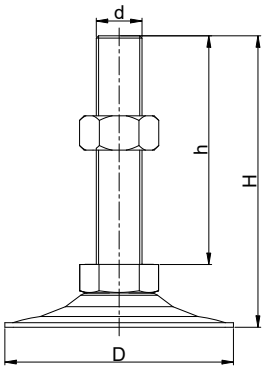

SAI STEEL SHEET FEET INOX



Product Code	D	d	h	H	Sw	Kg	Pckg
SAI 10 12 70	100	M12	70	96	17	450	8
SAI 10 16 10	100	M16	100	126	24	550	8
SAI 10 20 10	100	M20	100	126	24	700	8

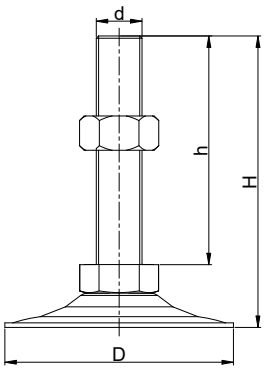

MAM

METAL ARTICULATED FEET



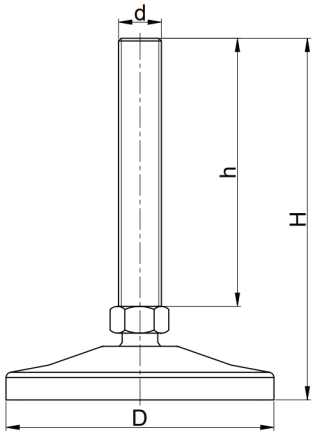

Product Code	D	d	h	H	Sw	Sphere Foot	Kg	Pckg
MAM 50 10 45	50	M10	45	78	13	12	450	4
MAM 50 10 50	50	M10	50	83	13	12	450	4
MAM 50 10 60	50	M10	60	93	13	12	450	4
MAM 50 10 75	50	M10	75	108	13	12	450	4
MAM 50 10 90	50	M10	90	123	13	12	450	4
MAM 50 10 10	50	M10	100	133	13	12	450	4
MAM 50 10 12	50	M10	120	153	13	12	450	4
MAM 50 12 45	50	M12	45	78	13	12	450	4
MAM 50 12 50	50	M12	50	83	13	12	450	4
MAM 50 12 60	50	M12	60	93	13	12	450	4
MAM 50 12 75	50	M12	75	108	13	12	450	4
MAM 50 12 90	50	M12	90	123	13	12	450	4
MAM 50 12 10	50	M12	100	133	13	12	450	4
MAM 50 12 12	50	M12	120	153	13	12	450	4
MAM 60 10 45	60	M10	45	78	13	12	750	4
MAM 60 10 50	60	M10	50	83	13	12	750	4
MAM 60 10 60	60	M10	60	93	13	12	750	4
MAM 60 10 75	60	M10	75	108	13	12	750	4
MAM 60 10 90	60	M10	90	123	13	12	750	4
MAM 60 10 10	60	M10	100	133	13	12	750	4
MAM 60 10 12	60	M10	120	153	13	12	750	4
MAM 60 12 45	60	M12	45	78	13	12	750	4
MAM 60 12 50	60	M12	50	83	13	12	750	4
MAM 60 12 60	60	M12	60	95	13	12	750	4
MAM 60 12 75	60	M12	75	108	13	12	750	4
MAM 60 12 90	60	M12	90	123	13	12	750	4
MAM 60 12 10	60	M12	100	133	13	12	750	4
MAM 60 12 12	60	M12	120	153	13	12	750	4
MAM 60 16 60	60	M16	60	95	19	18	750	4
MAM 60 16 10	60	M16	100	135	19	18	750	4
MAM 60 16 15	60	M16	150	185	19	18	750	4
MAM 60 16 20	60	M16	200	235	19	18	750	4
MAM 60 20 10	60	M20	100	135	22	18	750	4
MAM 60 20 15	60	M20	150	185	22	18	750	4
MAM 60 20 20	60	M20	200	235	22	18	750	4
MAM 80 16 60	80	M16	60	95	19	18	1000	4
MAM 80 16 10	80	M16	100	135	19	18	1000	4
MAM 80 16 15	80	M16	150	185	19	18	1000	4
MAM 80 16 20	80	M16	200	235	19	18	1000	4
MAM 80 20 10	80	M20	100	135	22	18	1000	4
MAM 80 20 15	80	M20	150	185	19	18	1000	4
MAM 80 20 20	80	M20	200	235	22	18	1000	4
MAM 10 16 60	100	M16	60	95	19	18	1500	4
MAM 10 16 10	100	M16	100	135	19	18	1500	4
MAM 10 16 15	100	M16	150	185	19	18	1500	4
MAM 10 16 20	100	M16	200	235	19	18	1500	4
MAM 10 20 10	100	M20	100	135	22	18	1500	4
MAM 10 20 15	100	M20	150	185	22	18	1500	4
MAM 10 20 20	100	M20	200	235	22	18	1500	4

MAIM

METAL PLATED FEET INOX



Product Code	D	d	h	H	Sw	Sphere Foot	Kg	Pckg
MAIM 50 10 50	50	M10	50	83	13	12	450	4
MAIM 50 10 75	50	M10	75	108	13	12	450	4
MAIM 50 10 10	50	M10	100	133	13	12	450	4
MAIM 50 12 50	50	M12	50	83	13	12	450	4
MAIM 50 12 75	50	M12	75	108	13	12	450	4
MAIM 50 12 10	50	M12	100	133	13	12	450	4
MAIM 60 10 50	60	M10	50	83	13	12	750	4
MAIM 60 10 75	60	M10	75	108	13	12	750	4
MAIM 60 10 10	60	M10	100	133	13	12	750	4
MAIM 60 12 50	60	M12	50	83	13	12	750	4
MAIM 60 12 75	60	M12	75	108	13	12	750	4
MAIM 60 12 10	60	M12	100	133	13	12	750	4
MAIM 60 16 10	60	M16	100	135	19	18	750	4
MAIM 60 16 15	60	M16	150	185	19	18	750	4
MAIM 60 16 20	60	M16	200	235	19	18	750	4
MAIM 60 20 10	60	M20	100	135	22	18	750	4
MAIM 60 20 15	60	M20	150	185	22	18	750	4
MAIM 60 20 20	60	M20	200	235	22	18	750	4
MAIM 80 16 10	80	M16	100	135	19	18	1000	4
MAIM 80 16 15	80	M16	150	185	19	18	1000	4
MAIM 80 16 20	80	M16	200	235	19	18	1000	4
MAIM 80 20 10	80	M20	100	135	22	18	1000	4
MAIM 80 20 15	80	M20	150	185	19	18	1000	4
MAIM 80 20 20	80	M20	200	235	22	18	1000	4
MAIM 10 16 10	100	M16	100	135	19	18	1500	4
MAIM 10 16 15	100	M16	150	185	19	18	1500	4
MAIM 10 16 20	100	M16	200	235	22	18	1500	4
MAIM 10 20 10	100	M20	100	135	22	18	1500	4
MAIM 10 20 15	100	M20	150	185	22	18	1500	4
MAIM 10 20 20	100	M20	200	235	22	18	1500	4

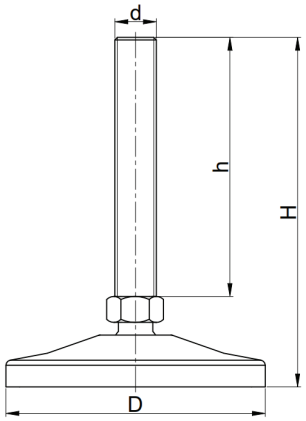

KT RUBBER BASE



Product Code	L1xL2	H	Kg	Pckg
KT 100 20	100x100	20	500	4
KT 100 30	100x100	30	500	4
KT 120 20	120x120	20	750	4
KT 120 30	120x120	30	750	4
KT 150 20	150x150	20	1000	4
KT 150 30	150x150	30	1000	4
KT 200 20	200x200	20	1250	2
KT 200 30	200x200	30	1250	2

KTs RUBBER BASE / Black



Product Code	L1xL2	H	Kg	Pckg
KTs 100 20	100x100	20	500	4
KTs 100 30	100x100	30	500	4
KTs 120 20	120x120	20	750	4
KTs 120 30	120x120	30	750	4
KTs 150 20	150x150	20	1000	4
KTs 150 30	150x150	30	1000	4
KTs 200 20	200x200	20	1250	2
KTs 200 30	200x200	30	1250	2

RUBBER



Product Code			D	Pckg
KKA	**040**	**Rubber**	40	100
KKA	**060**	**Rubber**	60	40
KKA	**080**	**Rubber**	80	20
KKA	**100**	**Rubber**	100	15
KKA	**120**	**Rubber**	120	10
MDA	**080**	**Rubber**	80	10
MDA	**120**	**Rubber**	120	8
MDA	**160**	**Rubber**	160	2
MDA	**200**	**Rubber**	200	2
MDA	**240**	**Rubber**	240	1
MAS	**060**	**Rubber**	60	100
MAS	**080**	**Rubber**	80	100
MAS	**100**	**Rubber**	100	100
PAM	**040**	**Rubber**	40	100
PAM	**050**	**Rubber**	50	100
PAM	**060**	**Rubber**	60	100
PAM	**080**	**Rubber**	80	100
PAM	**110**	**Rubber**	110	50
PAS	**125**	**Rubber**	125	50

PAM PLASTIC ARTICULATED FEET



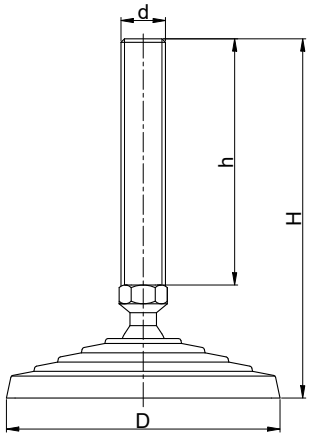

Temperature reslstance: -20°C to +100°C

Product Code	D	d	h	H	Sw	Sphere Foot	Kg	Pckg
PAM 40 08 45	40	M8	45	75	13	12	400	25
PAM 40 08 60	40	M8	60	90	13	12	400	25
PAM 40 10 45	40	M10	45	75	13	12	400	25
PAM 40 10 50	40	M10	50	80	13	12	400	25
PAM 40 10 60	40	M10	60	90	13	12	400	25
PAM 40 10 75	40	M10	75	105	13	12	400	25
PAM 40 10 90	40	M10	90	120	13	12	400	25
PAM 40 10 10	40	M10	100	130	13	12	400	25
PAM 40 10 12	40	M10	120	150	13	12	400	25
PAM 40 12 45	40	M12	45	75	13	12	400	25
PAM 40 12 50	40	M12	50	80	13	12	400	25
PAM 40 12 60	40	M12	60	90	13	12	400	25
PAM 40 12 75	40	M12	75	105	13	12	400	25
PAM 40 12 90	40	M12	90	120	13	12	400	25
PAM 40 12 10	40	M12	100	130	13	12	400	25
PAM 40 12 12	40	M12	120	150	13	12	400	25
PAM 50 08 45	50	M8	45	75	13	12	450	25
PAM 50 08 60	50	M8	60	90	13	12	450	25
PAM 50 08 90	50	M8	90	120	13	12	450	16
PAM 50 10 45	50	M10	45	75	13	12	450	25
PAM 50 10 50	50	M10	50	80	13	12	450	25
PAM 50 10 60	50	M10	60	90	13	12	450	25
PAM 50 10 75	50	M10	75	105	13	12	450	25
PAM 50 10 90	50	M10	90	120	13	12	450	25
PAM 50 10 10	50	M10	100	130	13	12	450	25
PAM 50 10 12	50	M10	120	150	13	12	450	25
PAM 50 12 45	50	M12	45	75	13	12	450	25
PAM 50 12 50	50	M12	50	80	13	12	450	25
PAM 50 12 60	50	M12	60	90	13	12	450	25
PAM 50 12 75	50	M12	75	105	13	12	450	25
PAM 50 12 90	50	M12	90	120	13	12	450	25
PAM 50 12 10	50	M12	100	130	13	12	450	25
PAM 50 12 12	50	M12	120	150	13	12	450	25
PAM 60 08 45	60	M8	45	79	13	12	500	16
PAM 60 08 60	60	M8	60	94	13	12	500	16
PAM 60 08 90	60	M8	90	124	13	12	500	16
PAM 60 10 45	60	M10	45	79	13	12	500	16
PAM 60 10 50	60	M10	50	84	13	12	500	16
PAM 60 10 60	60	M10	60	94	13	12	500	16
PAM 60 10 75	60	M10	75	109	13	12	500	16
PAM 60 10 90	60	M10	90	124	13	12	500	16
PAM 60 10 10	60	M10	100	134	13	12	500	16
PAM 60 10 12	60	M12	120	154	13	12	500	16

Rubber

Product Code	D	Pckg
PAM 040 Rubber	40	100
PAM 050 Rubber	50	100
PAM 060 Rubber	60	100
PAM 080 Rubber	80	100
PAM 110 Rubber	110	50

PAM rubber serles can also be used In **PAIM, PAMD, PAIMD, PMA** and **PAMB** products.

PAM PLASTIC ARTICULATED FEET



Temperature reslstance: -20°C to +100°C

Product Code	D	d	h	H	Sw	Sphere Foot	Kg	Pckg
PAM 60 12 60	60	M12	60	100	19	18	500	16
PAM 60 12 10	60	M12	100	140	19	18	500	16
PAM 60 12 15	60	M12	150	190	19	18	500	16
PAM 60 16 60	60	M16	60	100	19	18	500	16
PAM 60 16 10	60	M16	100	140	19	18	500	16
PAM 60 16 15	60	M16	150	190	19	18	500	16
PAM 60 16 20	60	M16	200	240	22	18	500	16
PAM 60 20 10	60	M20	100	140	22	18	500	16
PAM 60 20 15	60	M20	150	190	22	18	500	16
PAM 60 20 20	60	M20	200	240	22	18	500	16

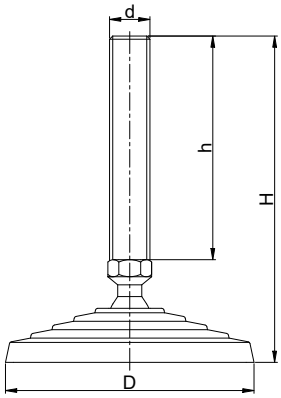

PAMZB PLASTIC ARTICULATED FEET



Temperature reslstance: -20°C to +100°C

Product Code	D	d	D2	D3	h	H	Sw	Sphere Foot	Kg	Pckg
PAMZB 80 12 60	80	M12	54	8	60	100	19	18	600	16
PAMZB 80 12 10	80	M12	54	8	100	140	19	18	600	16
PAMZB 80 12 15	80	M12	54	8	150	190	19	18	600	16
PAMZB 80 16 60	80	M16	54	8	60	100	19	18	600	16
PAMZB 80 16 10	80	M16	54	8	100	140	19	18	600	16
PAMZB 80 16 15	80	M16	54	8	150	190	19	18	600	16
PAMZB 80 16 20	80	M16	54	8	200	240	22	18	600	16
PAMZB 80 20 10	80	M20	54	8	100	140	22	18	600	16
PAMZB 80 20 15	80	M20	54	8	150	190	22	18	600	16
PAMZB 80 20 20	80	M20	54	8	200	240	22	18	600	16
PAMZB 11 12 60	110	M12	83	12	60	100	19	18	1000	16
PAMZB 11 12 10	110	M12	83	12	100	140	19	18	1000	16
PAMZB 11 12 15	110	M12	83	12	150	190	19	18	1000	16
PAMZB 11 16 60	110	M16	83	12	60	100	19	18	1000	16
PAMZB 11 16 10	110	M16	83	12	100	140	19	18	1000	16
PAMZB 11 16 15	110	M16	83	12	150	190	19	18	1000	16
PAMZB 11 16 20	110	M16	83	12	200	240	22	18	1000	16
PAMZB 11 20 10	110	M20	83	12	100	140	22	18	1000	16
PAMZB 11 20 15	110	M20	83	12	150	190	22	18	1000	16
PAMZB 11 20 20	110	M20	83	12	200	240	22	18	1000	16

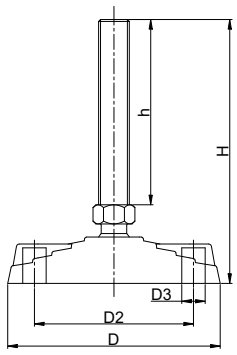

PAIM

PLASTIC ARTICULATED FEET INOX

STAINLESS STEEL INOX



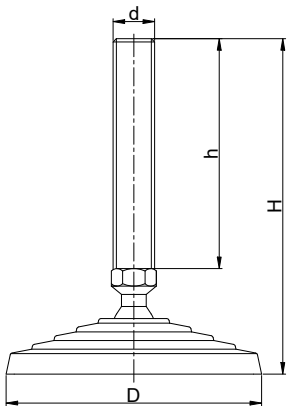

Temperature resIstance: -20°C to +100°C

Product Code	D	d	h	H	Sw	Sphere Foot	Kg	Pckg
PAIM 40 08 60	40	M8	60	89	13	12	400	16
PAIM 40 10 50	40	M10	50	79	13	12	400	16
PAIM 40 10 75	40	M10	75	104	13	12	400	16
PAIM 40 10 10	40	M10	100	129	13	12	400	16
PAIM 40 12 50	40	M12	50	79	13	12	400	16
PAIM 40 12 75	40	M12	75	104	13	12	400	16
PAIM 40 12 10	40	M12	100	129	13	12	400	16
PAIM 50 08 60	50	M8	60	89	13	12	450	16
PAIM 50 10 50	50	M10	50	79	13	12	450	16
PAIM 50 10 75	50	M10	75	104	13	12	450	16
PAIM 50 10 10	50	M10	100	129	13	12	450	16
PAIM 50 12 50	50	M12	50	79	13	12	450	16
PAIM 50 12 75	50	M12	75	104	13	12	450	16
PAIM 50 12 10	50	M12	100	129	13	12	450	16
PAIM 60 16 10	60	M16	100	141	19	18	500	16
PAIM 60 16 15	60	M16	150	181	19	18	500	16
PAIM 60 20 10	60	M20	100	131	22	18	500	16
PAIM 60 20 15	60	M20	150	181	22	18	500	16

PAIMZB

PLASTIC ARTICULATED FEET INOX

STAINLESS STEEL INOX



Temperature resIstance: -20°C to +100°C

Product Code	D	d	D2	D3	h	H	Sw	Sphere Foot	Kg	Pckg
PAIMZB 80 16 10	80	M16	54	8	100	131	19	18	600	16
PAIMZB 80 16 15	80	M16	54	8	150	181	19	18	600	16
PAIMZB 80 20 10	80	M20	54	8	100	131	22	18	600	16
PAIMZB 80 20 15	80	M20	54	8	150	190	22	18	600	16
PAIMZB 11 16 10	110	M16	83	12	100	131	19	18	1000	16
PAIMZB 11 16 15	110	M16	83	12	150	181	19	18	1000	16
PAIMZB 11 20 10	110	M20	83	12	100	131	22	18	1000	16
PAIMZB 11 20 15	110	M20	83	12	150	181	22	18	1000	16

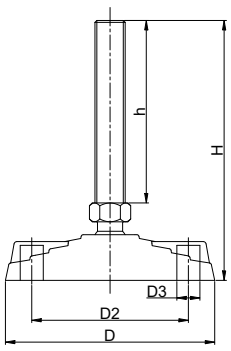

PAMB PLASTIC ARTICULATED FEET INOX

Temperature reslstance: -20°C to +100°C

Product Code	D	d	h	H	Sw	Sphere Foot	Kg	Pckg
PAMB 60 10	60	M10	24	47	19	18	500	10
PAMB 60 12	60	M12	24	47	19	18	500	10
PAMB 60 16	60	M16	24	47	19	18	500	10



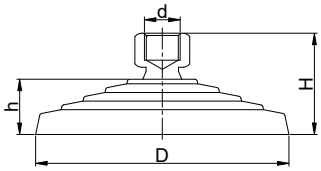

PAMBZB PLASTIC ARTICULATED FEET INOX

Temperature reslstance: -20°C to +100°C

Product Code	D	d	D2	D3	h	H	Sw	Sphere Foot	Kg	Pckg
PAMBZB 80 10	80	M10	54	8	24	47	19	18	600	10
PAMBZB 80 12	80	M12	54	8	24	47	19	18	600	10
PAMBZB 80 16	80	M16	54	8	24	47	19	18	600	10
PAMBZB 11 10	110	M10	83	12	24	47	19	18	1000	4
PAMBZB 11 12	110	M12	83	12	24	47	19	18	1000	4
PAMBZB 11 16	110	M16	83	12	24	47	19	18	1000	4



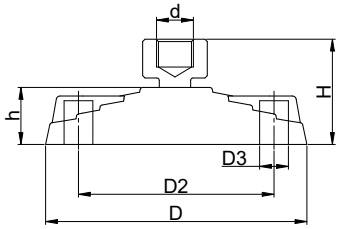

PAMD

PLASTIC ARTICULATED FEET



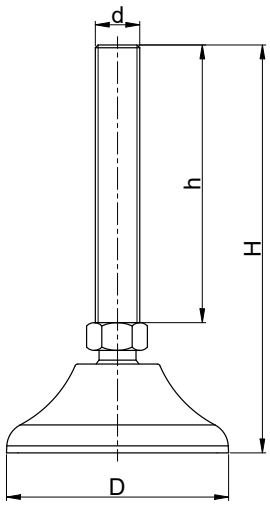

Temperature reslstance: -20°C to +100°C

Product Code	D	d	h	H	Sw	Sphere Foot	Kg	Pckg
PAMD 40 08 45	40	M8	45	74	13	12	400	25
PAMD 40 08 60	40	M8	60	89	13	12	400	25
PAMD 40 10 45	40	M10	45	74	13	12	400	25
PAMD 40 10 50	40	M10	50	79	13	12	400	25
PAMD 40 10 60	40	M10	60	89	13	12	400	25
PAMD 40 10 75	40	M10	75	104	13	12	400	25
PAMD 40 10 90	40	M10	90	119	13	12	400	25
PAMD 40 10 10	40	M10	100	129	13	12	400	25
PAMD 40 10 12	40	M10	120	149	13	12	400	25
PAMD 40 12 45	40	M12	45	74	13	12	400	25
PAMD 40 12 50	40	M12	50	79	13	12	400	25
PAMD 40 12 60	40	M12	60	89	13	12	400	25
PAMD 40 12 75	40	M12	75	104	13	12	400	25
PAMD 40 12 90	40	M12	90	119	13	12	400	25
PAMD 40 12 10	40	M12	100	129	13	12	400	25
PAMD 40 12 12	40	M12	120	149	13	12	400	25
PAMD 50 08 45	50	M8	45	74	13	12	450	25
PAMD 50 08 60	50	M8	60	89	13	12	450	25
PAMD 50 10 45	50	M10	45	74	13	12	450	25
PAMD 50 10 50	50	M10	50	79	13	12	450	25
PAMD 50 10 60	50	M10	60	89	13	12	450	25
PAMD 50 10 75	50	M10	75	104	13	12	450	25
PAMD 50 10 90	50	M10	90	119	13	12	450	25
PAMD 50 10 10	50	M10	100	129	13	12	450	25
PAMD 50 10 12	50	M10	120	149	13	12	450	25
PAMD 50 12 45	50	M12	45	74	13	12	450	25
PAMD 50 12 50	50	M12	50	79	13	12	450	25
PAMD 50 12 60	50	M12	60	89	13	12	450	25
PAMD 50 12 75	50	M12	75	104	13	12	450	25
PAMD 50 12 90	50	M12	90	119	13	12	450	25
PAMD 50 12 10	50	M12	100	129	13	12	450	25
PAMD 50 12 12	50	M12	120	149	13	12	450	25
PAMD 60 08 45	60	M8	45	85	13	12	500	16
PAMD 60 08 60	60	M8	60	100	13	12	500	16
PAMD 60 10 45	60	M10	45	85	13	12	500	16
PAMD 60 10 50	60	M10	50	90	13	12	500	16
PAMD 60 10 60	60	M10	60	100	13	12	500	16
PAMD 60 10 75	60	M10	75	115	13	12	500	16
PAMD 60 10 90	60	M10	90	130	13	12	500	16
PAMD 60 10 10	60	M10	100	140	13	12	500	16
PAMD 60 10 12	60	M10	120	160	13	12	500	16

PAMD

PLASTIC ARTICULATED FEET

Temperature reslstance: -20°C to +100°C



Product Code	D	d	h	H	Sw	Sphere Foot	Kg	Pckg
PAMD 60 12 60	60	M12	60	107	19	18	500	16
PAMD 60 12 10	60	M12	100	147	19	18	500	16
PAMD 60 12 15	60	M12	150	197	19	18	500	16
PAMD 60 16 60	60	M16	60	107	19	18	500	16
PAMD 60 16 10	60	M16	100	147	19	18	500	16
PAMD 60 16 15	60	M16	150	197	19	18	500	16
PAMD 60 16 20	60	M16	200	247	22	18	500	16
PAMD 60 20 10	60	M20	100	147	22	18	500	16
PAMD 60 20 15	60	M20	150	197	22	18	500	16
PAMD 60 20 20	60	M20	200	247	22	18	500	16
PAMD 80 12 60	80	M12	60	107	19	18	600	16
PAMD 80 12 10	80	M12	100	147	19	18	600	16
PAMD 80 12 15	80	M12	150	197	19	18	600	16
PAMD 80 16 60	80	M16	60	107	19	18	600	16
PAMD 80 16 10	80	M16	100	147	19	18	600	16
PAMD 80 16 15	80	M16	150	197	19	18	600	16
PAMD 80 16 20	80	M16	200	247	22	18	600	16
PAMD 80 20 10	80	M20	100	147	22	18	600	16
PAMD 80 20 15	80	M20	150	197	22	18	600	16
PAMD 80 20 20	80	M20	200	247	22	18	600	16
PAMD 11 12 60	110	M12	60	107	19	18	1000	16
PAMD 11 12 10	110	M12	100	147	19	18	1000	16
PAMD 11 12 15	110	M12	150	197	19	18	1000	16
PAMD 11 16 60	110	M16	60	107	19	18	1000	16
PAMD 11 16 10	110	M16	100	147	19	18	1000	16
PAMD 11 16 15	110	M16	150	197	19	18	1000	16
PAMD 11 16 20	110	M16	200	247	22	18	1000	16
PAMD 11 20 10	110	M20	100	147	22	18	1000	16
PAMD 11 20 15	110	M20	150	197	22	18	1000	16
PAMD 11 20 20	110	M20	200	247	22	18	1000	16

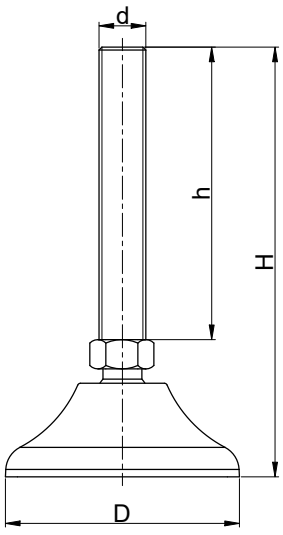

PAIMD

PLASTIC ARTICULATED FEET INOX

Temperature reslstance: -20°C to +100°C



Product Code	D	d	h	H	Sw	Sphere Foot	Kg	Pckg
PAIMD 40 08 60	40	M8	60	89	13	12	400	25
PAIMD 40 10 50	40	M10	50	79	13	12	400	25
PAIMD 40 10 75	40	M10	75	104	13	12	400	25
PAIMD 40 10 10	40	M10	100	129	13	12	400	25
PAIMD 40 12 50	40	M12	50	79	13	12	400	25
PAIMD 40 12 75	40	M12	75	104	13	12	400	25
PAIMD 40 12 10	40	M12	100	129	13	12	400	25
PAIMD 50 08 60	50	M8	60	89	13	12	450	25
PAIMD 50 10 50	50	M10	50	79	13	12	450	25
PAIMD 50 10 75	50	M10	75	104	13	12	450	25
PAIMD 50 10 10	50	M10	100	129	13	12	450	25
PAIMD 50 12 50	50	M12	50	79	13	12	450	25
PAIMD 50 12 75	50	M12	75	104	13	12	450	25
PAIMD 50 12 10	50	M12	100	129	13	12	450	25
PAIMD 60 16 10	60	M16	100	131	19	18	500	16
PAIMD 60 16 15	60	M16	150	181	19	18	500	16
PAIMD 60 20 10	60	M20	100	131	22	18	500	16
PAIMD 60 20 15	60	M20	150	181	22	18	500	16
PAIMD 80 16 10	80	M16	100	131	19	18	600	16
PAIMD 80 16 15	80	M16	150	181	19	18	600	16
PAIMD 80 20 10	80	M20	100	131	22	18	600	16
PAIMD 80 20 15	80	M20	150	181	22	18	600	16
PAIMD 11 16 10	110	M16	100	131	19	18	1000	16
PAIMD 11 16 15	110	M16	150	181	19	18	1000	16
PAIMD 11 20 10	110	M20	100	131	22	18	1000	16
PAIMD 11 20 15	110	M20	150	181	22	18	1000	16

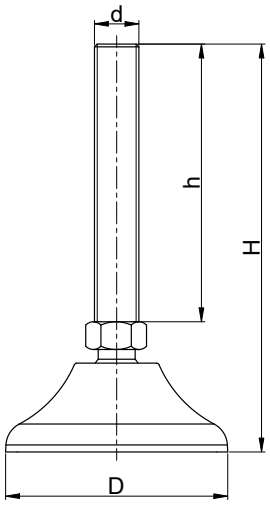

PMA

PLASTIC ARTICULATED FEET



Temperature reslstance: -20°C to +100°C

Product Code	D	d	h	H	Sw	Sphere Foot	Pckg
PMA 60 10 50	60	M10	50	94	24	18	16
PMA 60 10 10	60	M10	100	144	24	18	16
PMA 60 12 50	60	M12	50	94	24	18	16
PMA 60 12 10	60	M12	100	144	24	18	16
PMA 60 16 50	60	M16	50	94	24	18	16
PMA 60 16 10	60	M16	100	144	24	18	16
PMA 60 16 15	60	M16	150	194	24	18	16
PMA 60 16 20	60	M16	200	244	24	18	16
PMA 60 20 50	60	M20	50	94	24	18	16
PMA 60 20 10	60	M20	100	144	24	18	16
PMA 60 20 15	60	M20	150	194	24	18	16
PMA 60 20 20	60	M20	200	244	24	18	16
PMA 80 10 50	80	M10	50	94	24	18	16
PMA 80 10 10	80	M10	100	144	24	18	16
PMA 80 12 50	80	M12	50	94	24	18	16
PMA 80 12 10	80	M12	100	144	24	18	16
PMA 80 16 50	80	M16	50	94	24	18	16
PMA 80 16 10	80	M16	100	144	24	18	16
PMA 80 16 15	80	M16	150	194	24	18	16
PMA 80 16 20	80	M16	200	244	24	18	16
PMA 80 20 50	80	M20	50	94	24	18	16
PMA 80 20 10	80	M20	100	144	24	18	16
PMA 80 20 15	80	M20	150	194	24	18	16
PMA 80 20 20	80	M20	200	244	24	18	16
PMA 11 10 50	110	M10	50	94	24	18	16
PMA 11 10 10	110	M10	100	144	24	18	16
PMA 11 12 50	110	M12	50	94	24	18	16
PMA 11 12 10	110	M12	100	144	24	18	16
PMA 11 16 50	110	M16	50	94	24	18	16
PMA 11 16 10	110	M16	100	144	24	18	16
PMA 11 16 15	110	M16	150	194	24	18	16
PMA 11 16 20	110	M16	200	244	24	18	16
PMA 11 20 50	110	M20	50	94	24	18	16
PMA 11 20 10	110	M20	100	144	24	18	16
PMA 11 20 15	110	M20	150	194	24	18	16
PMA 11 20 20	110	M20	200	244	24	18	16

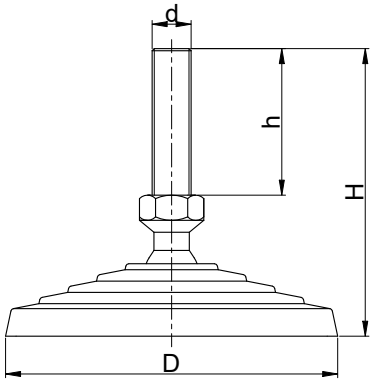

PRA PLASTIC FEET



Temperature reslstance: -20°C to +100°C

Product Code	D	d	h	l1	Kg	Pckg
PRA 35 08 40	35	M8	40	26	45	100
PRA 35 08 50	35	M8	50	26	45	100
PRA 35 08 60	35	M8	60	26	45	100
PRA 35 10 40	35	M10	40	26	50	100
PRA 35 10 50	35	M10	50	26	50	100
PRA 35 10 60	35	M10	60	26	50	100
PRA 35 12 40	35	M12	40	26	55	100
PRA 35 12 50	35	M12	50	26	55	100
PRA 35 12 60	35	M12	60	26	55	100
PRA 45 10 40	45	M10	40	30	75	50
PRA 45 10 50	45	M10	50	30	75	50
PRA 45 10 60	45	M10	60	30	75	50
PRA 45 12 40	45	M12	40	30	80	50
PRA 45 12 50	45	M12	50	30	80	50
PRA 45 12 60	45	M12	60	30	80	50
PRA 45 14 40	45	M14	40	30	85	50
PRA 45 14 50	45	M14	50	30	85	50
PRA 45 14 60	45	M14	60	30	85	50
PRA 45 16 40	45	M16	40	30	90	50
PRA 45 16 50	45	M16	50	30	90	50
PRA 45 16 60	45	M16	60	30	90	50
PRA 55 10 40	55	M10	40	35	100	50
PRA 55 10 50	55	M10	50	35	100	50
PRA 55 10 60	55	M10	60	35	100	50
PRA 55 12 40	55	M12	40	35	125	50
PRA 55 12 50	55	M12	50	35	125	50
PRA 55 12 60	55	M12	60	35	125	50
PRA 55 14 40	55	M14	40	35	150	50
PRA 55 14 50	55	M14	50	35	150	50
PRA 55 14 60	55	M14	60	35	150	50
PRA 55 16 40	55	M16	40	35	175	50
PRA 55 16 50	55	M16	50	35	175	50
PRA 55 16 60	55	M16	60	35	175	50

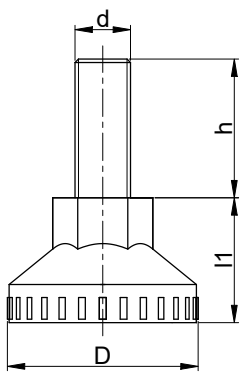

PRAB PLASTIC FEET CAMBERED

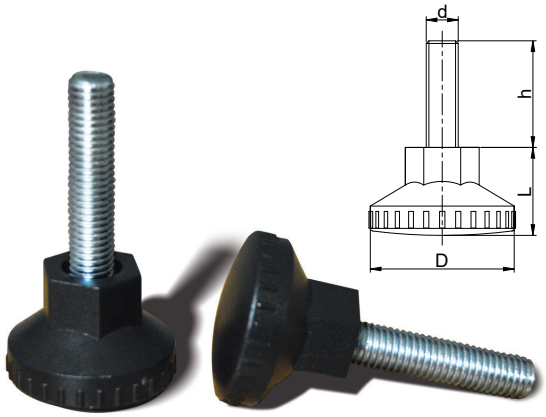

Temperature reslstance: -20°C to +100°C

Product Code	D	d	h	L	Kg	Pckg
PRAB 46 10 40	45	M10	40	33	75	50
PRAB 46 10 50	45	M10	50	33	75	50
PRAB 46 10 60	45	M10	60	33	75	50
PRAB 46 12 40	45	M12	40	33	80	50
PRAB 46 12 50	45	M12	50	33	80	50
PRAB 46 12 60	45	M12	60	33	80	50
PRAB 46 14 40	45	M14	40	33	85	50
PRAB 46 14 50	45	M14	50	33	85	50
PRAB 46 14 60	45	M14	60	33	85	50
PRAB 46 16 40	45	M16	40	33	90	50
PRAB 46 16 50	45	M16	50	33	90	50
PRAB 46 16 60	45	M16	60	33	90	50

PRd PLASTIC TUBE / Rectangle

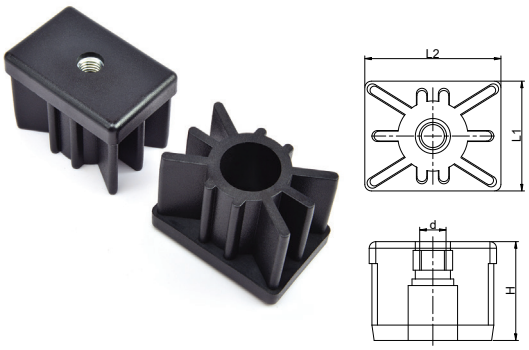

Temperature reslstance: -20°C to +100°C

Product Code	L1xL2	d	H	T	Kg	Pckg
PRd 30 40 10	30x40	M10	38	1,5	330	100
PRd 30 40 12	30x40	M12	38	1,5	330	100
PRd 30 50 10	30x50	M10	38	1,5	400	100
PRd 30 50 12	30x50	M12	38	1,5	400	100
PRd 40 60 10	40x60	M10	45	1,5	525	25
PRd 40 60 12	40x60	M12	45	1,5	525	25
PRd 40 60 14	40x60	M14	45	1,5	575	25
PRd 40 60 16	40x60	M16	45	1,5	600	25

PRk PLASTIC TUBE / Square

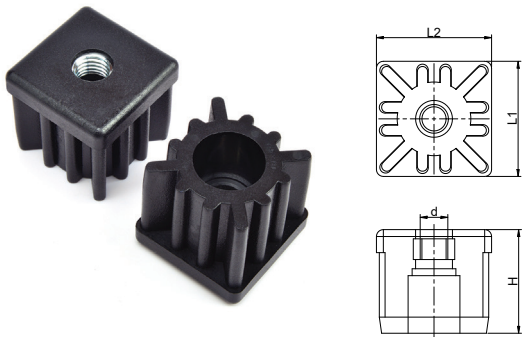

Temperature reslstance: -20°C to +100°C

Product Code	L1xL2	d	H	T	Kg	Pckg
PRk 25 25 10	25x25	M10	25,7	1,5	275	100
PRk 30 30 08	30x30	M8	30	1,5	275	100
PRk 30 30 10	30x30	M10	30	1,5	300	100
PRk 30 30 12	30x30	M12	30	1,5	325	100
PRk 40 40 10	40x40	M10	38	1,5	400	50
PRk 40 40 12	40x40	M12	38	1,5	400	50
PRk 40 40 14	40x40	M14	38	1,5	450	50
PRk 40 40 16	40x40	M16	38	1,5	500	50
PRk 50 50 10	50x50	M10	45	1,5	525	25
PRk 50 50 12	50x50	M12	45	1,5	525	25
PRk 50 50 14	50x50	M14	45	1,5	575	25
PRk 50 50 16	50x50	M16	45	1,5	600	25

PAS PLASTIC FIXED FEET

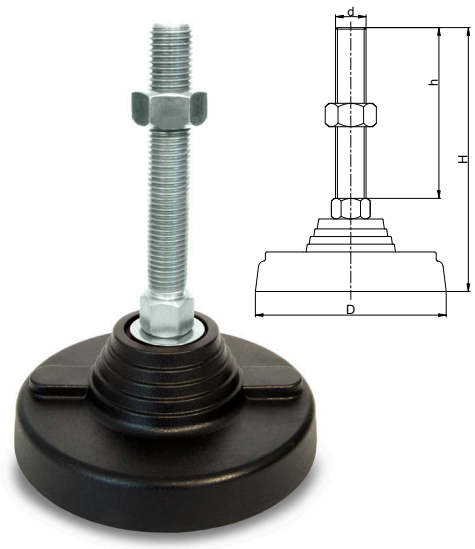

Temperature reslstance: -20°C to +100°C

Product Code	D	d	h	H	Sw	Kg	Pckg
PAS 12 16 10	125	M16	100	160	19	1500	4
PAS 12 16 15	125	M16	150	210	19	1500	4
PAS 12 20 10	125	M20	100	160	22	1500	4
PAS 12 20 15	125	M20	150	210	22	1500	4
PAS 12 24 15	125	M24	150	210	27	1500	4
PAS 12 20 20	125	M20	200	260	22	1500	4
PAS 12 20 25	125	M20	250	310	22	1500	4
PAS 12 20 30	125	M20	300	360	22	1500	4

PAIS PLASTIC FIXED FEET INOX

STAINLESS STEEL INOX

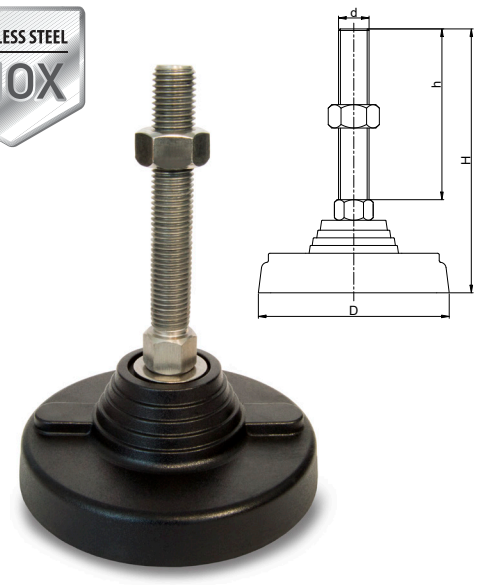

Temperature reslstance: -20°C to +100°C

Product Code	D	d	h	H	Sw	Kg	Pckg
PAIS 12 16 10	125	M16	100	160	19	1500	4
PAIS 12 16 15	125	M16	150	210	19	1500	4
PAIS 12 20 10	125	M20	100	160	22	1500	4
PAIS 12 20 15	125	M20	150	210	22	1500	4
PAIS 12 24 15	125	M24	150	210	27	1500	4
PAIS 12 20 20	125	M20	200	260	22	1500	4
PAIS 12 20 25	125	M20	250	310	22	1500	4
PAIS 12 20 30	125	M20	300	360	22	1500	4

Rubber

Product Code	D	Pckg
PAS 120 Rubber	120	50

PAS rubber serles can also be used In **PAIS** products.

PPA PLASTIC FEET



Temperature reslstance: -20°C to +100°C

Product Code	D	d	L	h	H	Kg	Pckg
PPA 60 10 70	60	M10	70	28	98	150	50
PPA 60 12 70	60	M12	70	28	98	250	50
PPA 60 16 80	60	M16	80	28	108	400	50

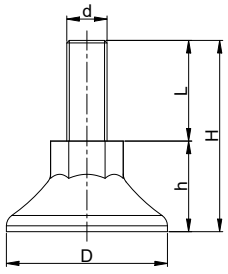

HIA

HYGIENIC INOX FEET



Product Code	D	H	D2	h	h1	h2	h3	h4	h5	F	Kg	Pckg
HIA 80 16 90	80	195	60	90	114	81	27	54	141	M16	500	1

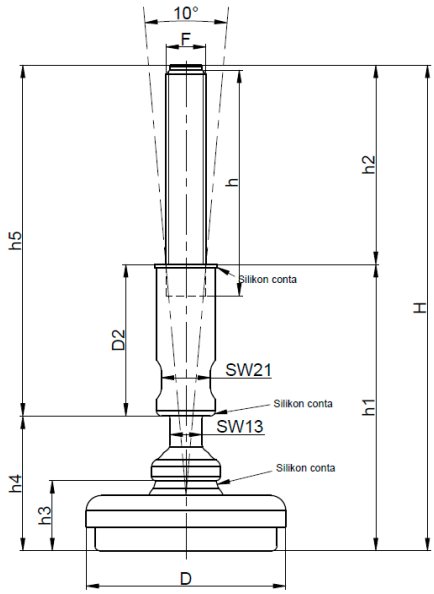

HIAZb

HYGIENIC INOX FEET CONNECTED to the FLOOR



Product Code	D	I	H	D2	h	h1	h2	h3	h4	h5	F	Kg	Pckg
HIAZb 80 16 90	80	54	192	60	90	112	80	24	52	140	M16	500	1

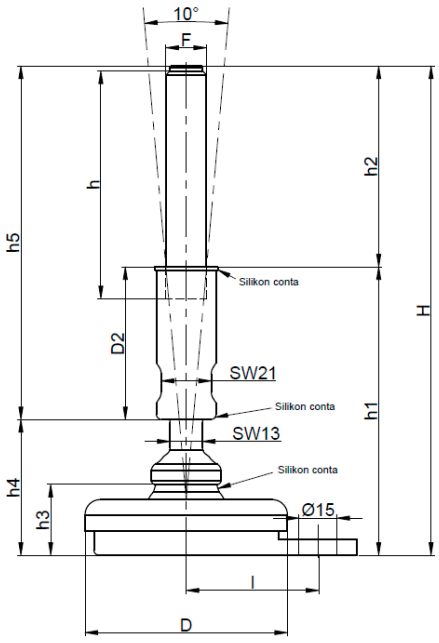

HPAIMZB

HYGIENIC PLASTIC FEET/INOX FEET CONNECTED to the FLOOR



Product Code	D	H	D2	D3	D4	h	h1	h2	h3	h4	h5	F	Kg	Pckg
HPAIMZB 80 16 90	80	169	60	54	8	90	111	58	24	51	118	M16	500	1
HPAIMZB 11 16 90	110	169	60	82	12	90	111	58	24	51	118	M16	700	1

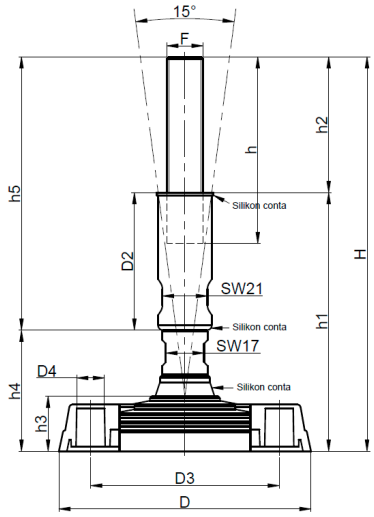

HPAIMD

HYGIENIC PLASTIC FEET INOX FLAT



Product Code	D	H	D2	h	h1	h2	h3	h4	h5	F	Kg	Pckg
HPAIMD 60 16 90	60	176	60	90	118	58	29	52	140	M16	400	1
HPAIMD 80 16 90	80	176	60	90	118	58	29	52	140	M16	500	1
HPAIMD 11 16 90	110	176	60	90	118	58	29	52	140	M16	700	1

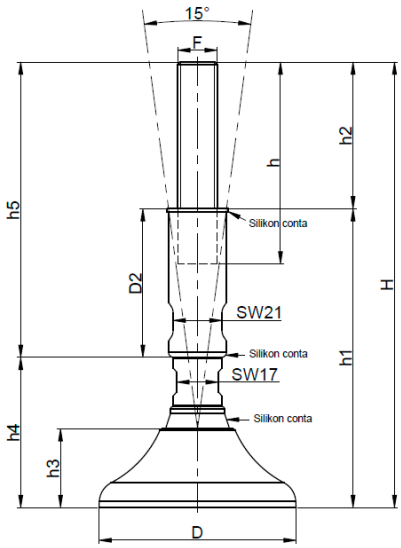

MAMr METAL ARTİCULATED FEET/ Rubber



Product Code	D	d	h	H	SW	Sphere Head	Kg	Pckg
MAMR 60 10 45	60	M10	45	84	13	12	750	4
MAMR 60 10 50	60	M10	50	89	13	12	750	4
MAMR 60 10 60	60	M10	60	99	13	12	750	4
MAMR 60 10 75	60	M10	75	114	13	12	750	4
MAMR 60 10 90	60	M10	90	129	13	12	750	4
MAMR 60 10 10	60	M10	100	139	13	12	750	4
MAMR 60 10 12	60	M10	120	159	13	12	750	4
MAMR 60 12 45	60	M12	45	84	13	12	750	4
MAMR 60 12 50	60	M12	50	89	13	12	750	4
MAMR 60 12 60	60	M12	60	101	13	12	750	4
MAMR 60 12 75	60	M12	75	114	13	12	750	4
MAMR 60 12 90	60	M12	90	129	13	12	750	4
MAMR 60 12 10	60	M12	100	139	13	12	750	4
MAMR 60 12 12	60	M12	120	159	13	12	750	4
MAMR 60 16 60	60	M16	60	101	19	18	750	4
MAMR 60 16 10	60	M16	100	141	19	18	750	4
MAMR 60 16 15	60	M16	150	191	19	18	750	4
MAMR 60 16 20	60	M16	200	241	19	18	750	4
MAMR 60 20 10	60	M20	100	141	22	18	750	4
MAMR 60 20 15	60	M20	150	191	22	18	750	4
MAMR 60 20 20	60	M20	200	241	22	18	750	4
MAMR 80 16 60	80	M16	60	101	19	18	1000	4
MAMR 80 16 10	80	M16	100	141	19	18	1000	4
MAMR 80 16 15	80	M16	150	191	19	18	1000	4
MAMR 80 16 20	80	M16	200	241	19	18	1000	4
MAMR 80 20 10	80	M20	100	141	22	18	1000	4
MAMR 80 20 15	80	M20	150	191	19	18	1000	4
MAMR 80 20 20	80	M20	200	241	22	18	1000	4
MAMR 10 16 60	100	M16	60	101	19	18	1500	4
MAMR 10 16 10	100	M16	100	141	19	18	1500	4
MAMR 10 16 15	100	M16	150	191	19	18	1500	4
MAMR 10 16 20	100	M16	200	241	22	18	1500	4
MAMR 10 20 10	100	M20	100	141	22	18	1500	4
MAMR 10 20 15	100	M20	150	191	22	18	1500	4
MAMR 10 20 20	100	M20	200	241	22	18	1500	4

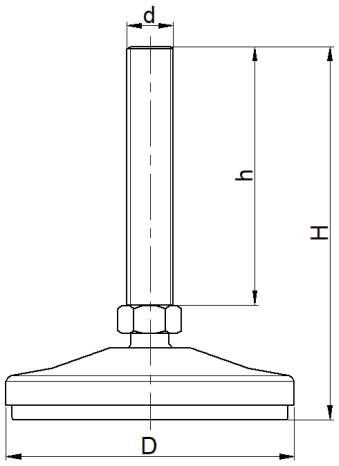

MAİMr METAL ARTİCULATED FEET INOX/ Rubber



Product Code	D	d	h	H	SW	Sphere Head	Kg	Pckg
MAIMR 50 10 50	50	M10	50	89	13	12	450	4
MAIMR 50 10 75	50	M10	75	114	13	12	450	4
MAIMR 50 10 10	50	M10	100	139	13	12	450	4
MAIMR 50 12 50	50	M12	50	89	13	12	450	4
MAIMR 50 12 75	50	M12	75	114	13	12	450	4
MAIMR 50 12 10	50	M12	100	139	13	12	450	4
MAIMR 60 10 50	60	M10	50	89	13	12	750	4
MAIMR 60 10 75	60	M10	75	114	13	12	750	4
MAIMR 60 10 10	60	M10	100	139	13	12	750	4
MAIMR 60 12 50	60	M12	50	89	13	12	750	4
MAIMR 60 12 75	60	M12	75	114	13	12	750	4
MAIMR 60 12 10	60	M12	100	139	13	12	750	4
MAIMR 60 16 10	60	M16	100	141	19	18	750	4
MAIMR 60 16 15	60	M16	150	191	19	18	750	4
MAIMR 60 16 20	60	M16	200	241	19	18	750	4
MAIMR 60 20 10	60	M20	100	141	22	18	750	4
MAIMR 60 20 15	60	M20	150	191	22	18	750	4
MAIMR 60 20 20	60	M20	200	241	22	18	750	4
MAIMR 80 16 10	80	M16	100	141	19	18	1000	4
MAIMR 80 16 15	80	M16	150	191	19	18	1000	4
MAIMR 80 16 20	80	M16	200	241	19	18	1000	4
MAIMR 80 20 10	80	M20	100	141	22	18	1000	4
MAIMR 80 20 15	80	M20	150	191	19	18	1000	4
MAIMR 80 20 20	80	M20	200	241	22	18	1000	4
MAIMR 10 16 10	100	M16	100	141	19	18	1500	4
MAIMR 10 16 15	100	M16	150	191	19	18	1500	4
MAIMR 10 16 20	100	M16	200	241	22	18	1500	4
MAIMR 10 20 10	100	M20	100	141	22	18	1500	4
MAIMR 10 20 15	100	M20	150	191	22	18	1500	4
MAIMR 10 20 20	100	M20	200	241	22	18	1500	4

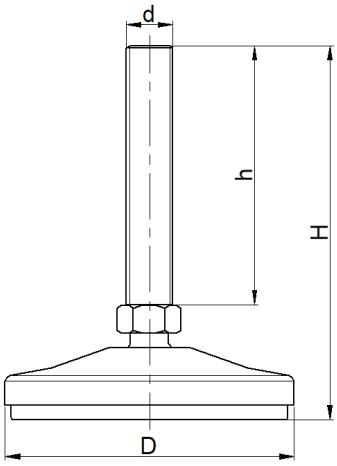

MAMB METAL ARTİCULATED FEET PAINTED



Product Code	D	d	h	H	SW	Sphere Head	Kg	Pckg
MAMB 60 10 45	60	M10	45	78	13	12	450	8
MAMB 60 10 50	60	M10	50	83	13	12	450	8
MAMB 60 10 60	60	M10	60	93	13	12	450	8
MAMB 60 10 75	60	M10	75	108	13	12	450	8
MAMB 60 10 90	60	M10	90	123	13	12	450	8
MAMB 60 10 10	60	M10	100	133	13	12	450	8
MAMB 60 10 12	60	M10	120	153	13	12	450	8
MAMB 60 12 45	60	M12	45	78	13	12	450	8
MAMB 60 12 50	60	M12	50	83	13	12	450	8
MAMB 60 12 60	60	M12	60	95	13	12	450	8
MAMB 60 12 75	60	M12	75	108	13	12	450	8
MAMB 60 12 90	60	M12	90	123	13	12	450	8
MAMB 60 12 10	60	M12	100	133	13	12	450	8
MAMB 60 12 12	60	M12	120	153	13	12	450	8
MAMB 60 16 60	60	M16	60	95	19	18	450	8
MAMB 60 16 10	60	M16	100	135	19	18	450	8
MAMB 60 16 15	60	M16	150	185	19	18	450	8
MAMB 60 16 20	60	M16	200	235	19	18	450	8
MAMB 60 20 10	60	M20	100	135	22	18	450	8
MAMB 60 20 15	60	M20	150	185	22	18	450	8
MAMB 60 20 20	60	M20	200	235	22	18	450	8
MAMB 80 16 60	80	M16	60	95	19	18	500	8
MAMB 80 16 10	80	M16	100	135	19	18	500	8
MAMB 80 16 15	80	M16	150	185	19	18	500	8
MAMB 80 16 20	80	M16	200	235	19	18	500	8
MAMB 80 20 10	80	M20	100	135	22	18	500	8
MAMB 80 20 15	80	M20	150	185	19	18	500	8
MAMB 80 20 20	80	M20	200	235	22	18	500	8
MAMB 10 16 60	100	M16	60	95	19	18	500	8
MAMB 10 16 10	100	M16	100	135	19	18	500	8
MAMB 10 16 15	100	M16	150	185	19	18	500	8
MAMB 10 16 20	100	M16	200	235	22	18	500	8
MAMB 10 20 10	100	M20	100	135	22	18	500	8
MAMB 10 20 15	100	M20	150	185	22	18	500	8
MAMB 10 20 20	100	M20	200	235	22	18	500	8

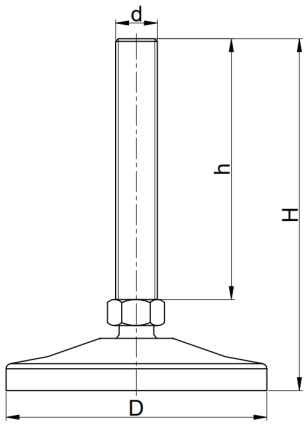

MAMBR METAL ARTİCULATED FEET PAINTED/ Rubber



Product Code	D	d	h	H	SW	Sphere Head	Kg	Pckg
MAMBR 60 10 45	60	M10	45	84	13	12	750	4
MAMBR 60 10 50	60	M10	50	89	13	12	750	4
MAMBR 60 10 60	60	M10	60	99	13	12	750	4
MAMBR 60 10 75	60	M10	75	114	13	12	750	4
MAMBR 60 10 90	60	M10	90	129	13	12	750	4
MAMBR 60 10 10	60	M10	100	139	13	12	750	4
MAMBR 60 10 12	60	M10	120	159	13	12	750	4
MAMBR 60 12 45	60	M12	45	84	13	12	750	4
MAMBR 60 12 50	60	M12	50	89	13	12	750	4
MAMBR 60 12 60	60	M12	60	101	13	12	750	4
MAMBR 60 12 75	60	M12	75	114	13	12	750	4
MAMBR 60 12 90	60	M12	90	129	13	12	750	4
MAMBR 60 12 10	60	M12	100	139	13	12	750	4
MAMBR 60 12 12	60	M12	120	159	13	12	750	4
MAMBR 60 16 60	60	M16	60	101	19	18	750	4
MAMBR 60 16 10	60	M16	100	141	19	18	750	4
MAMBR 60 16 15	60	M16	150	191	19	18	750	4
MAMBR 60 16 20	60	M16	200	241	19	18	750	4
MAMBR 60 20 10	60	M20	100	141	22	18	750	4
MAMBR 60 20 15	60	M20	150	191	22	18	750	4
MAMBR 60 20 20	60	M20	200	241	22	18	750	4
MAMBR 80 16 60	80	M16	60	101	19	18	1000	4
MAMBR 80 16 10	80	M16	100	141	19	18	1000	4
MAMBR 80 16 15	80	M16	150	191	19	18	1000	4
MAMBR 80 16 20	80	M16	200	241	19	18	1000	4
MAMBR 80 20 10	80	M20	100	141	22	18	1000	4
MAMBR 80 20 15	80	M20	150	191	19	18	1000	4
MAMBR 80 20 20	80	M20	200	241	22	18	1000	4
MAMBR 10 16 60	100	M16	60	101	19	18	1500	4
MAMBR 10 16 10	100	M16	100	141	19	18	1500	4
MAMBR 10 16 15	100	M16	150	191	19	18	1500	4
MAMBR 10 16 20	100	M16	200	241	22	18	1500	4
MAMBR 10 20 10	100	M20	100	141	22	18	1500	4
MAMBR 10 20 15	100	M20	150	191	22	18	1500	4
MAMBR 10 20 20	100	M20	200	241	22	18	1500	4

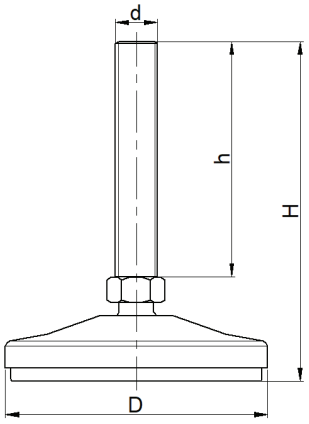

PAMYZB PLASTIC FOOT WITH SWIVEL SIDE-MOUNTED FLOOR CONNECTION



Product Code	D	D2	D3	d	H	Kg	Pckg
PAMYZB 80 12 60	80	125	10	M12	60	800	4
PAMYZB 80 12 10	80	125	10	M12	100	800	4
PAMYZB 80 12 15	80	125	10	M12	150	800	4
PAMYZB 80 16 60	80	125	10	M16	60	800	4
PAMYZB 80 16 10	80	125	10	M16	100	800	4
PAMYZB 80 16 15	80	125	10	M16	150	800	4
PAMYZB 80 16 20	80	125	10	M16	200	800	4
PAMYZB 80 20 10	80	125	10	M20	100	800	4
PAMYZB 80 20 15	80	125	10	M20	150	800	4
PAMYZB 80 20 20	80	125	10	M20	200	800	4

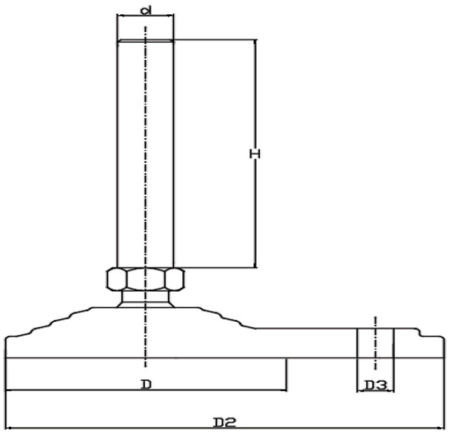

SAYZB

SHEET METAL FOOT WITH SIDE-MOUNTED FLOOR CONNECTION



Product Code	D	D2	D3	d	H	Kg	Pckg
SAYZB 80 12 90	80	125	13	M12	90	1000	4
SAYZB 80 16 10	80	125	13	M16	100	1000	4
SAYZB 80 20 15	80	125	13	M20	150	1000	4

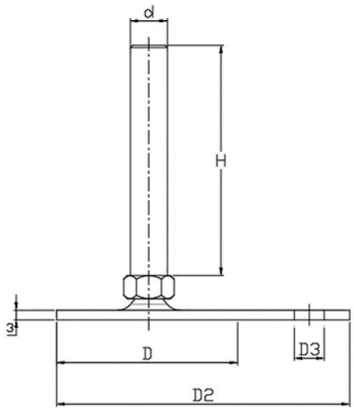

SAİYZB

INOX SHEET METAL FOOT, SIDE-MOUNTED FLOOR CONNECTION



Product Code	D	D2	D3	d	H	Kg	Pckg
SAİYZB 80 12 70	80	125	13	M12	70	1000	4
SAİYZB 80 12 10	80	125	13	M12	100	1000	4
SAİYZB 80 12 15	80	125	13	M12	150	1000	4
SAİYZB 80 16 10	80	125	13	M16	100	1000	4
SAİYZB 80 16 15	80	125	13	M16	150	1000	4
SAİYZB 80 20 10	80	125	13	M20	100	1000	4
SAİYZB 80 20 15	80	125	13	M20	150	1000	4

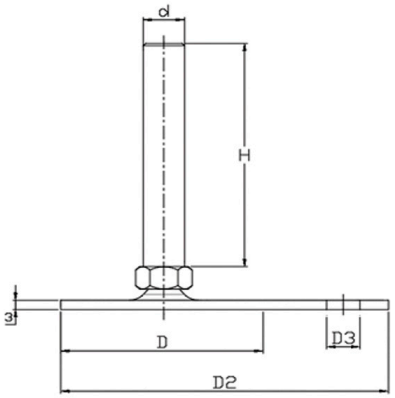

SAYZBR SHEET METAL FOOT WITH SIDE-MOUNTED FLOOR CONNECTION

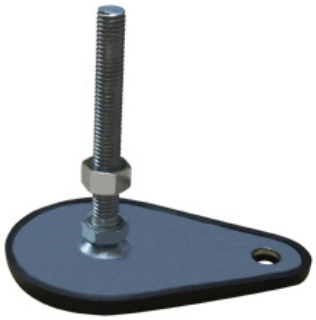

Product Code	D	D2	D3	d	H	Kg	Pckg
SAYZBR 80 12 90	80	125	13	M12	90	1000	4
SAYZBR 80 16 10	80	125	13	M16	100	1000	4
SAYZBR 80 20 15	80	125	13	M20	150	1000	4

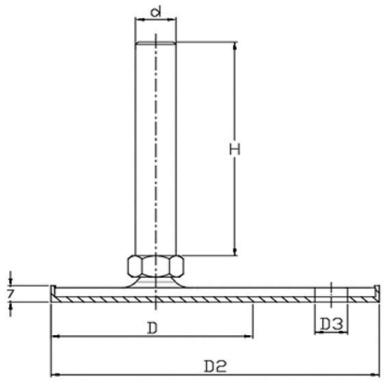

SAİYZBR INOX SHEET METAL FOOT, SIDE-MOUNTED FLOOR CONNECTION, RUBBER BASE



Product Code	D	D2	D3	d	H	Kg	Pckg
SAİYZBR 80 12 70	80	125	13	M12	70	1000	4
SAİYZBR 80 12 10	80	125	13	M12	100	1000	4
SAİYZBR 80 12 15	80	125	13	M12	150	1000	4
SAİYZBR 80 16 10	80	125	13	M16	100	1000	4
SAİYZBR 80 16 15	80	125	13	M16	150	1000	4
SAİYZBR 80 20 10	80	125	13	M20	100	1000	4
SAİYZBR 80 20 15	80	125	13	M20	150	1000	4

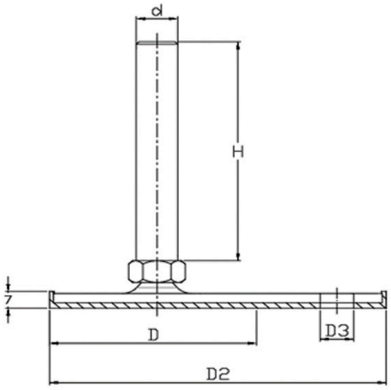

PC PLASTIC HANDWHEEL



Temperature reslstance: -20°C to +100°C

Product Code	D	d	d1	H	Pckg
PC 100 06	100	M6	28	40	1
PC 125 08	125	M8	30	45	1
PC 150 08	150	M8	50	50	1
PC 150 10	150	M10	50	50	1
PC 200 08	200	M8	50	55	1
PC 200 10	200	M10	50	55	1

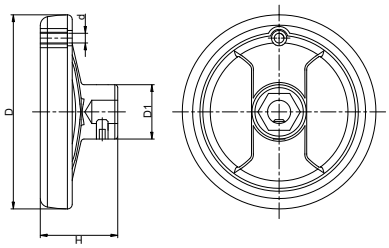

DC CAST IRON HANDWHEEL



Product Code	D	H	d	d2	Pckg
DC 75 30 16	75	35	30	-	1
DC 85 35 16	85	40	35	M8	1
DC 10 40 16	100	45	40	M10	1
DC 12 45 16	125	50	45	M10	1
DC 15 50 24	150	55	50	M10	1
DC 18 55 24	180	60	55	M10	1
DC 20 60 24	200	60	60	M10	1
DC 25 65 24	250	65	65	M10	1
DC 30 70 24	300	75	70	M10	1

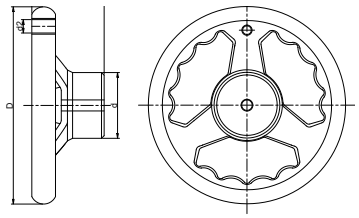

AC3 ALUMINIUM HANDWHEEL



Product Code	D	d	H	h	Pckg
AC3 080	80	24	29	15	1
AC3 100	100	26	33	18	1
AC3 125	125	28	36	20	1
AC3 160	160	33	40	22	1
AC3 200	200	38	45	23	1
AC3 250	250	48	50	24	1

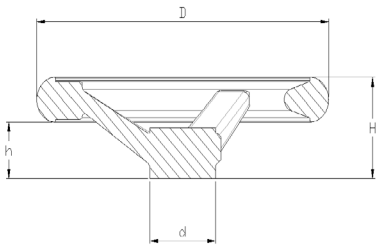

AC

ALUMINIUM HANDWHEEL

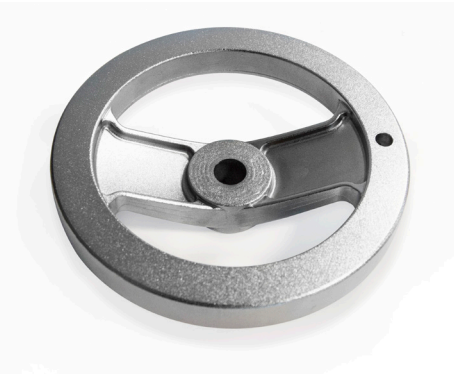

Product Code	D	H	d	d1	d2	h	Pckg
AC 125	125	33	12	31	6	15	1
AC 160	160	39	14	36	6	18	1
AC 200	200	45	18	42	6	20,5	1

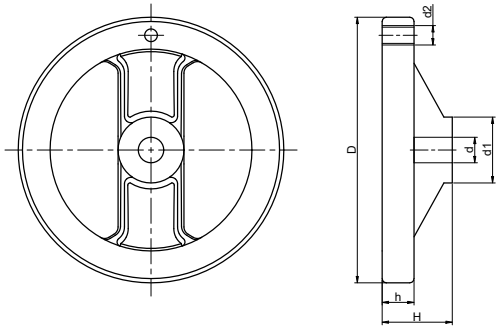

ACt

ALUMINIUM HANDWHEEL / Orange



Product Code	D	H	d	d1	d2	h	Pckg
ACt 125	125	33	12	31	6	15	1
ACt 160	160	39	14	36	6	18	1
ACt 200	200	45	18	42	6	20,5	1

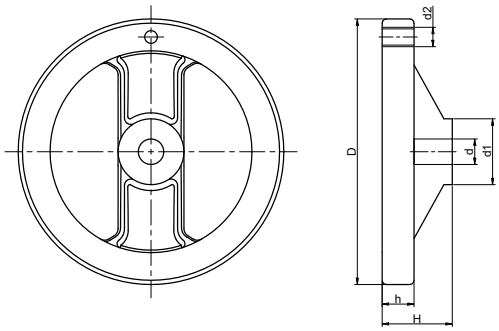

ACp

ALUMINIUM HANDWHEEL / Chromed



Product Code	D	H	d	d1	d2	h	Pckg
ACp 125	125	33	12	31	6	15	1
ACp 160	160	39	14	36	6	18	1
ACp 200	200	45	18	42	6	20,5	1

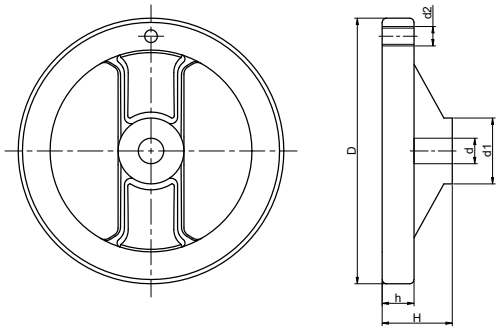

ACKK ALUMINIUM FOLD-AWAY HANDWHEEL



Product Code	D	H	d	d1	l	h	Pckg
ACKK 125	125	33	12	31	6	15	1
ACKK 160	160	39	14	36	6	18	1
ACKK 200	200	45	18	42	6	20,5	1

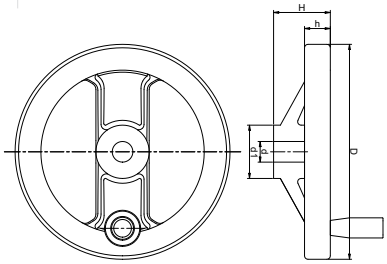

ACKKt ALUMINIUM FOLD-AWAY HANDWHEEL / Orange



Product Code	D	H	d	d1	l	h	Pckg
ACKKt 125	125	33	12	31	6	15	1
ACKKt 160	160	39	14	36	6	18	1
ACKKt 200	200	45	18	42	6	20,5	1

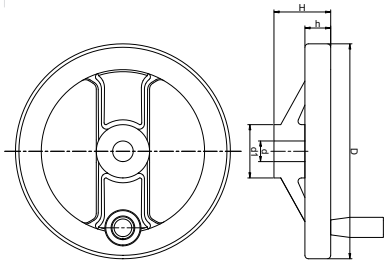

ACKKp ALUMINIUM FOLD-AWAY HANDWHEEL / Chromed



Product Code	D	H	d	d1	l	h	Pckg
ACKKp 125	125	33	12	31	6	15	1
ACKKp 160	160	39	14	36	6	18	1
ACKKp 200	200	45	18	42	6	20,5	1

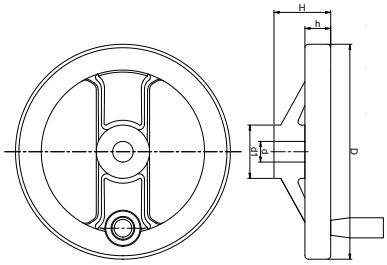

PCKK PLASTIC FOLD-AWAY HANDWHEEL



Product Code	D	D1	D2	H	H1	H2	B	R	Pckg
PCKK 150	150	50	32 SW	120	70	50	23	60	1
PCKK 200	200	50	32SW	125	70	55	28	82	1

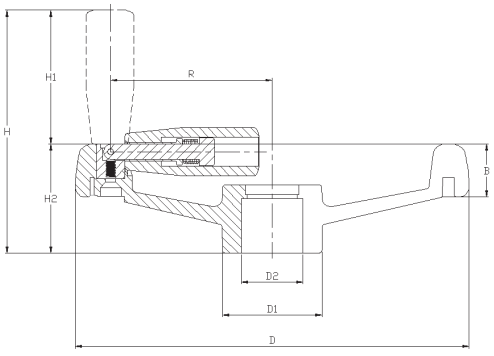

IPP INDEXING PISTON PIN



Product Code	D	d	d1	L	H	h	h1	h2	k	SW	Pckg
IPP 10 1,0	19	M10x1	5	8	49	25	6	18	3,9	12	25
IPP 12 1,5	23	M12x1,5	6	9	59	31	6	22	4,9	14	25
IPP 16 1,5	28	M16x1,5	10	12	71	37	8	26	7,9	17	25

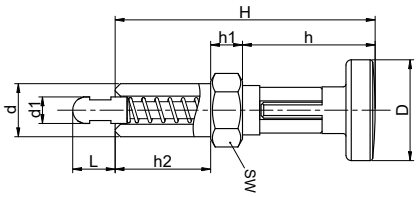

PIPP PLASTIC INDEXING PISTON PIN



Product Code	D	d1	d2	L	L1	L2	h	SW	Pkt
PIPP M8X1.25	14	M8X1.25	5	41,5	15,5	7	6	8	25
PIPP M10X1.5	18	M10X1.50	6	50	18	8	8	10	25
PIPP M12X1.75	25	M12X1.75	8	62,5	22,5	10,5	9	12	25

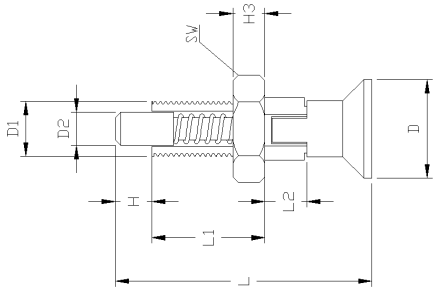

PDK PLASTIC REVOLVING HANDLE



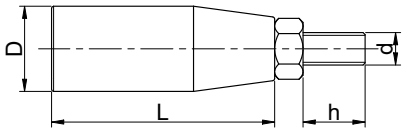

Temperature resIstance: -20°C to +100°C

Product Code	L	d	D	h	Pckg
PDK 55 06	55	M6	20	15,3	50
PDK 55 08	55	M8	20	15,3	50
PDK 55 10	55	M10	20	15,3	50
PDK 70 06	70	M6	25	15,3	50
PDK 70 08	70	M8	25	15,3	50
PDK 70 10	70	M10	25	15,3	50

PDKK PLASTIC FOLD-AWAY HANDLE



Temperature resIstance: -20°C to +100°C

Product Code	L	d	D	h	Pckg
PDKK 55 06	55	M6	20	19,5	50
PDKK 55 08	55	M8	20	19,5	50
PDKK 55 10	55	M10	20	19,5	50
PDKK 70 06	70	M6	25	19,5	50
PDKK 70 08	70	M8	25	19,5	50
PDKK 70 10	70	M10	25	19,5	50

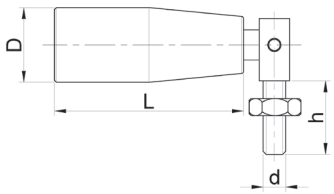

CDKK PLASTIC FOLD-AWAY HANDLE



Product Code	D	d	h	L	Pckg
CDKK 50 06	20	M6	19,5	50	10
CDKK 50 08	20	M8	19,5	50	10
CDKK 70 08	20	M8	19,5	70	10
CDKK 70 10	20	M10	19,5	70	10

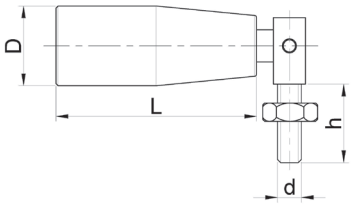

KKCK CHROMIUM-PLATED STEEL HANDLE



Product Code	D	d	h	L	Pckg
KKCK 20 54 06	20	M6	10	54	10
KKCK 20 54 08	20	M8	11	54	10
KKCK 20 54 10	20	M10	14	54	10
KKCK 22 72 06	22	M6	10	72	10
KKCK 22 72 08	22	M8	11	72	10
KKCK 22 72 10	22	M10	14	72	10
KKCK 24 88 06	24	M6	10	88	10
KKCK 24 88 08	24	M8	11	88	10
KKCK 24 88 10	24	M10	14	88	10

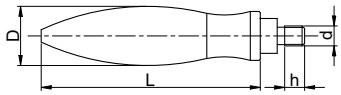

DK CAST IRON HANDLE



Product Code	L	D	SxS	h1	h2	h3	h4	Pckg
DK 100 14X14	100	28	14x14	29	13	60	50	4
DK 125 17X17	125	34	17x17	34	13	67	50	4
DK 160 19X19	160	38	19x19	40	14	77	64	1
DK 200 22X22	200	44	22x22	45	21	95	81	1
DK 250 24X24	250	47	24x24	53	21	114	81	1

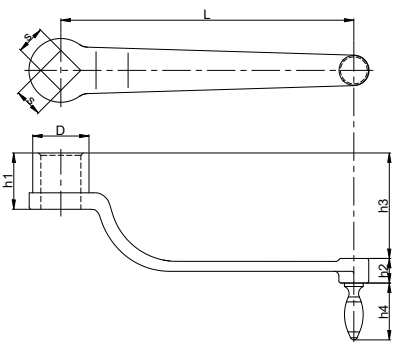

PT1 PLASTIC HANDLE



Temperature reslstance: -20°C to +100°C

Product Code	d	d1	d2	H	h	h1	h2	A	I	L	Pckg
PT1 11 08	28	M8	18,4	40,5	34	31,5	15	24	117	145	50
PT1 13 08	28	M8	18,4	43	36,5	34	15	24	132	160	50

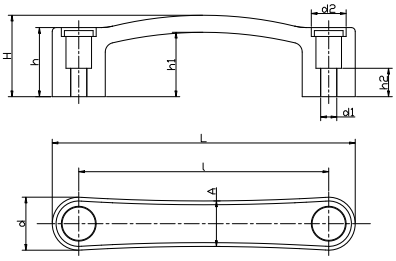

PTB1 PLASTIC HANDLE



Temperature reslstance: -20°C to +100°C

Product Code	d	d1	d2	H	h	h1	h2	A	I	L	Pckg
PTB1 11 05	28	M5	18,4	40,5	34	31,5	12	24	117	145	50
PTB1 13 06	28	M6	18,4	43	36,5	34	12	24	132	160	50

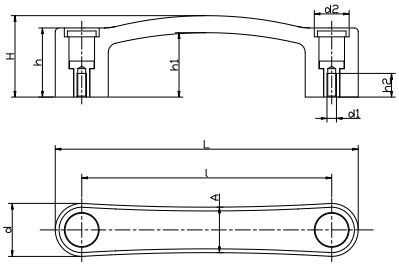

PTB1P PLASTIC HANDLE



Temperature reslstance: -20°C to +100°C

Product Code	d	d1	d2	H	h	h1	h2	A	I	L	Pckg
PTB1P 11 05	28	M5	18,4	40,5	34	31,5	12	24	117	145	50
PTB1P 13 06	28	M6	18,4	43	36,5	34	12	24	132	160	50

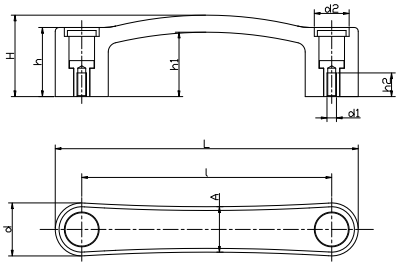

PT PLASTIC HANDLE



RAL 7021 Black

Temperature reslstance: -20°C to +100°C

Product Code	L	L1	d	h	Pckg
PT 11 08	137	117	M8	41	25
PT 14 08	160	140	M8	46	25

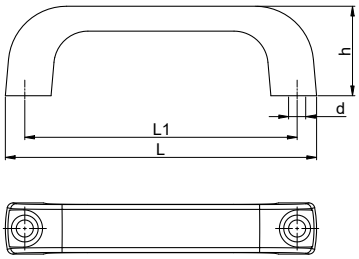

PTt PLASTIC HANDLE / Orange



RAL 2004 Orange

Temperature reslstance: -20°C to +100°C

Product Code	L	L1	d	h	Pckg
PTt 11 08	137	117	M8	41	25
PTt 14 08	160	140	M8	46	25

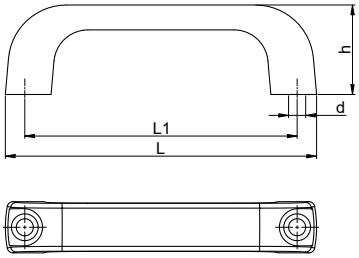

PTk PLASTIC HANDLE / Red



RAL 3000 Red

Temperature reslstance: -20°C to +100°C

Product Code	L	L1	d	h	Pckg
PTk 11 08	137	117	M8	41	25
PTk 14 08	160	140	M8	46	25

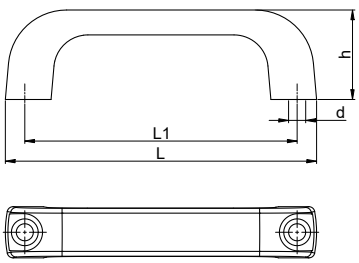

BT BAKALITE HANDLE



Product Code	L	l1	d	Pckg
BT 13 06 11	132	109	M6	25
BT 16 08 15	165	131	M8	25
BT 16 10 17	165	131	M10	25

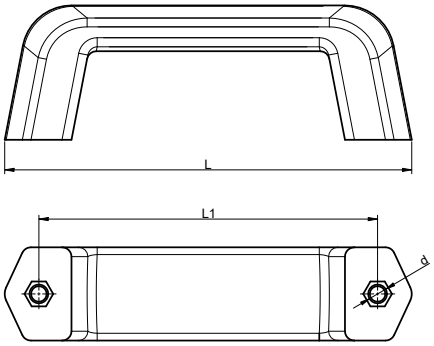

AT ALUMINIUM HANDLE



Product Code	l1	L	B	d	H	Pckg
AT 200 20	200	230	20	M8	57	10
AT 300 20	300	330	20	M8	57	10
AT 400 20	400	430	20	M8	57	10
AT 500 20	500	530	20	M8	57	10
AT -20			20	M8	57	10

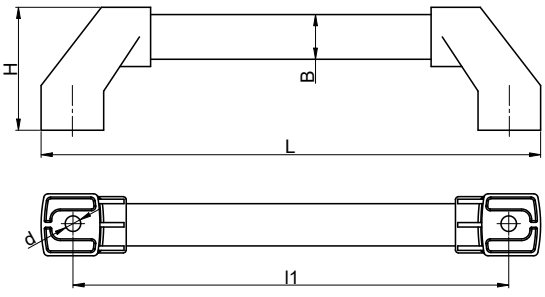

MTs METAL HANDLE BLACK

Product Code	l1	L	B	d	H	Pckg
MTs 300 30	300	330	30	m8	78	10
MTs 400 30	400	430	30	m8	78	10
MTs 500 30	500	530	30	m8	78	10
MTs 600 30	600	630	30	m8	78	10
MT-30			30	m8	78	10



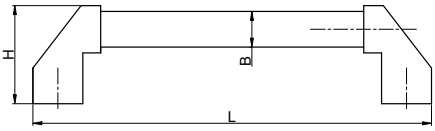

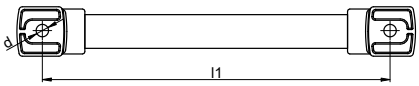

AT METAL HANDLE CHROMED

Product Code	l1	L	B	d	H	Pckg
AT 300 30	300	330	30	m8	78	10
AT 400 30	400	430	30	m8	78	10
AT 500 30	500	530	30	m8	78	10
AT 600 30	600	630	30	m8	78	10
AT 30						



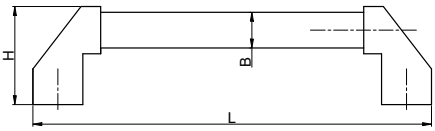

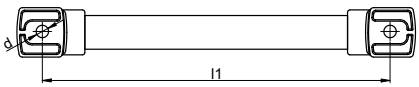

ZTk ZAMAK HANDLE CHROMIUM

Product Code	Pckg
ZTk 120 05	4



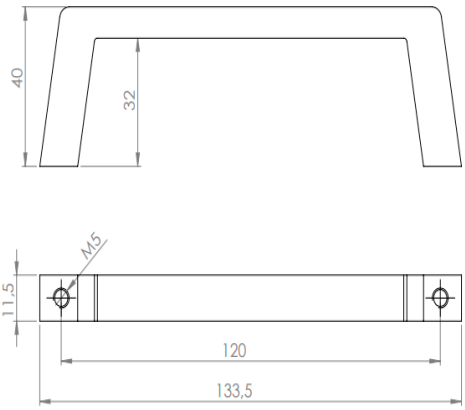

ZTs ZAMAK HANDLE BLACK

Product Code	Pckg
ZTs 120 05	4



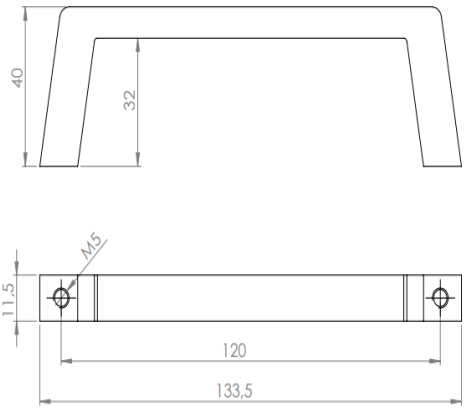

PGT PLASTIC HANDLE



Product Code	Pckg
PGT	25

Temperature reslstance: -20°C to +100°C

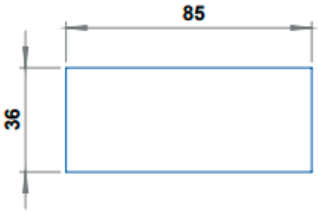

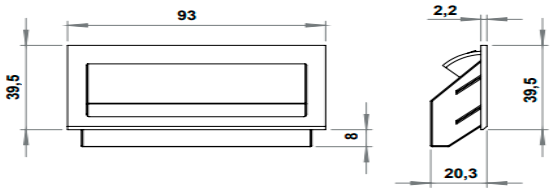

PGT
Ts=0.8-2.0 mm

PGT1-2 PLASTIC HANDLE



Product Code	Pckg
PGT1	25
PGT2	25

Temperature reslstance: -20°C to +100°C

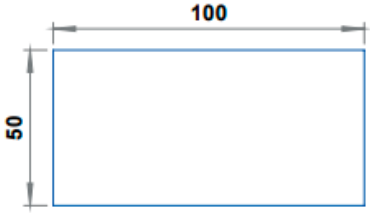

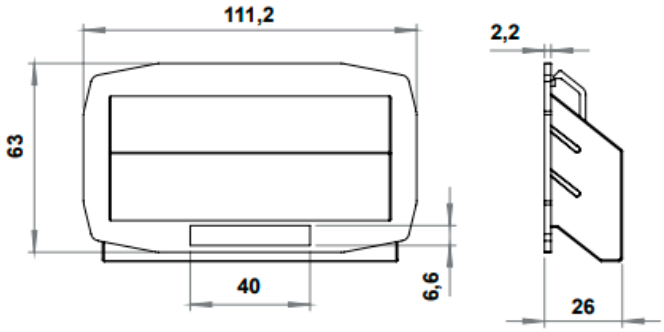

PGT1	PGT2
Ts=0.8-1.2 mm	Ts=1.2-1.6 mm

KTd CABLE HOLDER/ Rectangle

Product Code	Pkt
KTd 9,3X12X24	100

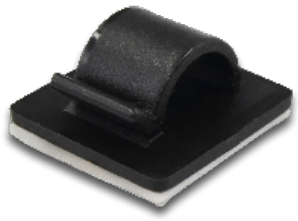

*Ürünün alt kısmında çift taraflı bant vardır.

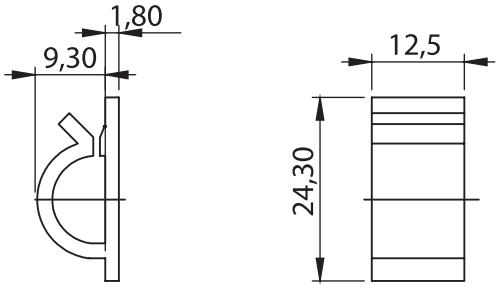

KTk CABLE HOLDER/ Square

Product Code	Pkt
KTk 9X24	100

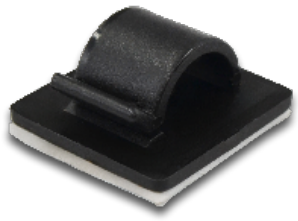

*Ürünün alt kısmında çift taraflı bant vardır.

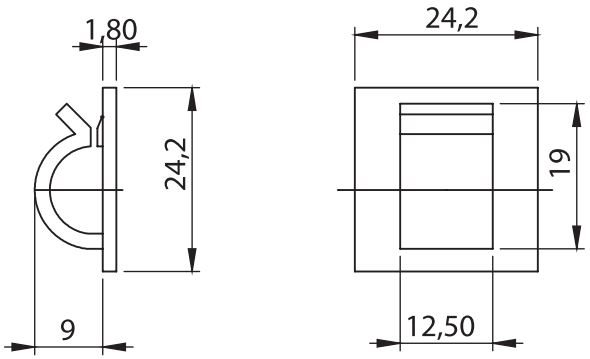

PKC PLASTIC HANDLE BOLTED

Temperature reslstance: -20°C to +100°C



Product Code	R	d	I	H	D	d1	L	l1	H1	h1	h2	Pckg
PKC 63 06 30	63	M6	30	45,5	24	18,5	76	13	52	5	38	10
PKC 63 06 40	63	M6	40	45,5	24	18,5	76	13	52	5	38	10
PKC 63 08 30	63	M8	30	45,5	24	18,5	76	13	52	5	38	10
PKC 63 08 40	63	M8	40	45,5	24	18,5	76	13	52	5	38	10
PKC 63 08 50	63	M8	50	45,5	24	18,5	76	13	52	5	38	10
PKC 63 10 30	63	M10	30	45,5	24	18,5	76	13	52	5	38	10
PKC 63 10 40	63	M10	40	45,5	24	18,5	76	13	52	5	38	10
PKC 63 10 50	63	M10	50	45,5	24	18,5	76	13	52	5	38	10
PKC 63 10 60	63	M10	60	45,5	24	18,5	76	13	52	5	38	10
PKC 63 12 30	63	M12	30	45,5	24	18,5	76	13	52	5	38	10
PKC 63 12 40	63	M12	40	45,5	24	18,5	76	13	52	5	38	10
PKC 63 12 50	63	M12	50	45,5	24	18,5	76	13	52	5	38	10
PKC 63 12 60	63	M12	60	45,5	24	18,5	76	13	52	5	38	10
PKC 78 06 30	78	M6	30	45,5	24	18,5	92	13	52	5	38	10
PKC 78 06 40	78	M6	40	45,5	24	18,5	92	13	52	5	38	10
PKC 78 08 30	78	M8	30	45,5	24	18,5	92	13	52	5	38	10
PKC 78 08 40	78	M8	40	45,5	24	18,5	92	13	52	5	38	10
PKC 78 08 50	78	M8	50	45,5	24	18,5	92	13	52	5	38	10
PKC 78 10 30	78	M10	30	45,5	24	18,5	92	13	52	5	38	10
PKC 78 10 40	78	M10	40	45,5	24	18,5	92	13	52	5	38	10
PKC 78 10 50	78	M10	50	45,5	24	18,5	92	13	52	5	38	10
PKC 78 10 60	78	M10	60	45,5	24	18,5	92	13	52	5	38	10
PKC 78 12 30	78	M12	30	45,5	24	18,5	92	13	52	5	38	10
PKC 78 12 40	78	M12	40	45,5	24	18,5	92	13	52	5	38	10
PKC 78 12 50	78	M12	50	45,5	24	18,5	92	13	52	5	38	10
PKC 78 12 60	78	M12	60	45,5	24	18,5	92	13	52	5	38	10

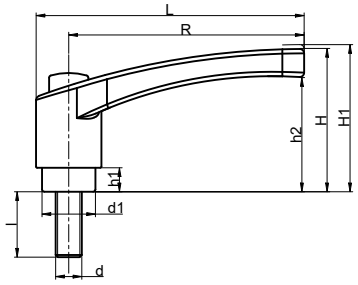

PKB PLASTIC HANDLE BUSHED



Temperature reslstance: -20°C to +100°C

Product Code	R	d	d1	D	L	l1	H	H1	h1	h2	Pckg
PKB 63 06	63	M6	18,5	24	76	13	45,5	52	5	38	10
PKB 63 08	63	M8	18,5	24	76	13	45,5	52	5	38	10
PKB 63 10	63	M10	18,5	24	76	13	45,5	52	5	38	10
PKB 63 12	63	M12	18,5	24	76	13	45,5	52	5	38	10
PKB 78 06	78	M6	18,5	24	92	13	45,5	52	5	38	10
PKB 78 08	78	M8	18,5	24	92	13	45,5	52	5	38	10
PKB 78 10	78	M10	18,5	24	92	13	45,5	52	5	38	10
PKB 78 12	78	M12	18,5	24	92	13	45,5	52	5	38	10

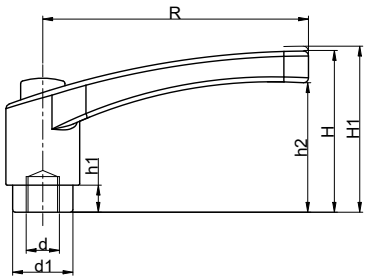

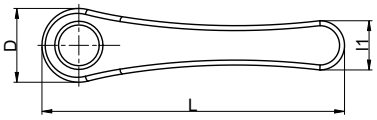

PKCI

PLASTIC HANDLE BOLTED / INOX

Temperature reslstance: -20°C to +100°C



Product Code	R	d	l	H	D	d1	L	l1	H1	h1	h2	Pckg
PKCI 63 06 30	63	M6	30	45,5	24	18,5	76	13	52	5	38	10
PKCI 63 08 30	63	M8	30	45,5	24	18,5	76	13	52	5	38	10
PKCI 63 10 30	63	M10	30	45,5	24	18,5	76	13	52	5	38	10
PKCI 63 12 30	63	M12	30	45,5	24	18,5	76	13	52	5	38	10
PKCI 78 06 30	78	M6	30	45,5	24	18,5	92	13	52	5	38	10
PKCI 78 08 30	78	M8	30	45,5	24	18,5	92	13	52	5	38	10
PKCI 78 10 30	78	M10	30	45,5	24	18,5	92	13	52	5	38	10
PKCI 78 12 30	78	M12	30	45,5	24	18,5	92	13	52	5	38	10

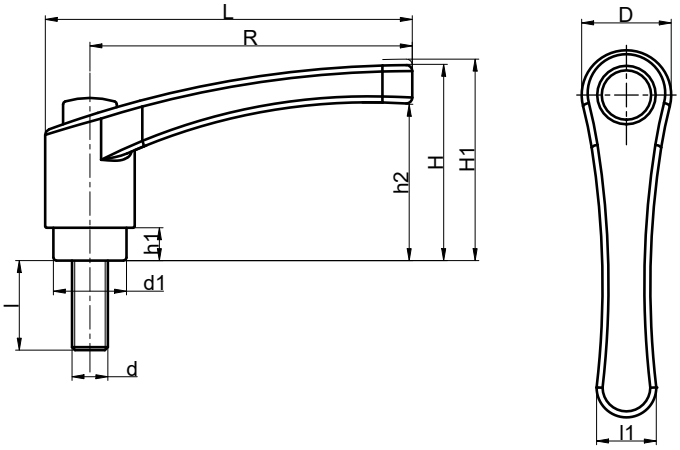

PKBI

PLASTIC HANDLE BUSHED / INOX

Temperature reslstance: -20°C to +100°C



Product Code	R	d	d1	D	L	l1	H	H1	h1	h2	Pckg
PKBI 63 06	63	M6	18,5	24	76	13	45,5	52	5	38	10
PKBI 63 08	63	M8	18,5	24	76	13	45,5	52	5	38	10
PKBI 63 10	63	M10	18,5	24	76	13	45,5	52	5	38	10
PKBI 63 12	63	M12	18,5	24	76	13	45,5	52	5	38	10
PKBI 78 06	78	M6	18,5	24	92	13	45,5	52	5	38	10
PKBI 78 08	78	M8	18,5	24	92	13	45,5	52	5	38	10
PKBI 78 10	78	M10	18,5	24	92	13	45,5	52	5	38	10
PKBI 78 12	78	M12	18,5	24	92	13	45,5	52	5	38	10

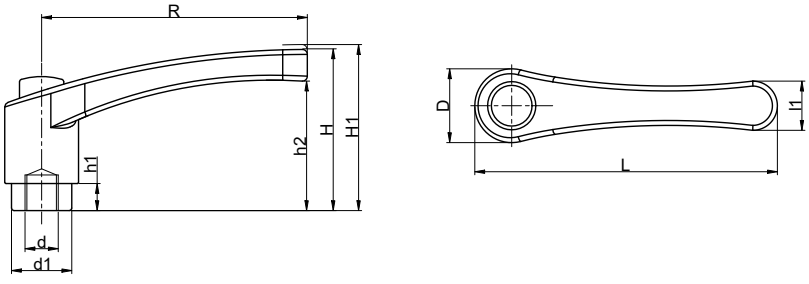

PKCt

PLASTIC HANDLE BOLTED / Orange

Temperature reslstance: -20°C to +100°C



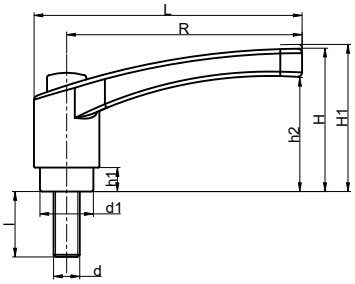



Product Code	R	d	l	H	D	d1	L	l1	H1	h1	h2	Pckg
PKCt 63 06 30	63	M6	30	45,5	24	18,5	76	13	52	5	38	10
PKCt 63 06 40	63	M6	40	45,5	24	18,5	76	13	52	5	38	10
PKCt 63 08 30	63	M8	30	45,5	24	18,5	76	13	52	5	38	10
PKCt 63 08 40	63	M8	40	45,5	24	18,5	76	13	52	5	38	10
PKCt 63 08 50	63	M8	50	45,5	24	18,5	76	13	52	5	38	10
PKCt 63 10 30	63	M10	30	45,5	24	18,5	76	13	52	5	38	10
PKCt 63 10 40	63	M10	40	45,5	24	18,5	76	13	52	5	38	10
PKCt 63 10 50	63	M10	50	45,5	24	18,5	76	13	52	5	38	10
PKCt 63 10 60	63	M10	60	45,5	24	18,5	76	13	52	5	38	10
PKCt 63 12 30	63	M12	30	45,5	24	18,5	76	13	52	5	38	10
PKCt 63 12 40	63	M12	40	45,5	24	18,5	76	13	52	5	38	10
PKCt 63 12 50	63	M12	50	45,5	24	18,5	76	13	52	5	38	10
PKCt 63 12 60	63	M12	60	45,5	24	18,5	76	13	52	5	38	10
PKCt 78 06 30	78	M6	30	45,5	24	18,5	92	13	52	5	38	10
PKCt 78 06 40	78	M6	40	45,5	24	18,5	92	13	52	5	38	10
PKCt 78 08 30	78	M8	30	45,5	24	18,5	92	13	52	5	38	10
PKCt 78 08 40	78	M8	40	45,5	24	18,5	92	13	52	5	38	10
PKCt 78 08 50	78	M8	50	45,5	24	18,5	92	13	52	5	38	10
PKCt 78 10 30	78	M10	30	45,5	24	18,5	92	13	52	5	38	10
PKCt 78 10 40	78	M10	40	45,5	24	18,5	92	13	52	5	38	10
PKCt 78 10 50	78	M10	50	45,5	24	18,5	92	13	52	5	38	10
PKCt 78 10 60	78	M10	60	45,5	24	18,5	92	13	52	5	38	10
PKCt 78 12 30	78	M12	30	45,5	24	18,5	92	13	52	5	38	10
PKCt 78 12 40	78	M12	40	45,5	24	18,5	92	13	52	5	38	10
PKCt 78 12 50	78	M12	50	45,5	24	18,5	92	13	52	5	38	10
PKCt 78 12 60	78	M12	60	45,5	24	18,5	92	13	52	5	38	10

PKBt

PLASTIC HANDLE BUSHED / Orange

Temperature reslstance: -20°C to +100°C



Product Code	R	d	d1	D	L	l1	H	H1	h1	h2	Pckg
PKBt 63 06	63	M6	18,5	24	76	13	45,5	52	5	38	10
PKBt 63 08	63	M8	18,5	24	76	13	45,5	52	5	38	10
PKBt 63 10	63	M10	18,5	24	76	13	45,5	52	5	38	10
PKBt 63 12	63	M12	18,5	24	76	13	45,5	52	5	38	10
PKBt 78 06	78	M6	18,5	24	92	13	45,5	52	5	38	10
PKBt 78 08	78	M8	18,5	24	92	13	45,5	52	5	38	10
PKBt 78 10	78	M10	18,5	24	92	13	45,5	52	5	38	10
PKBt 78 12	78	M12	18,5	24	92	13	45,5	52	5	38	10

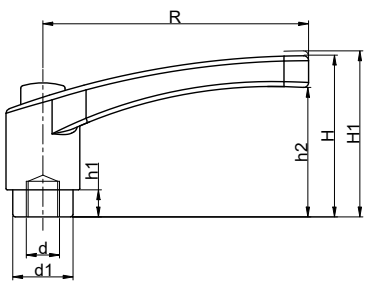

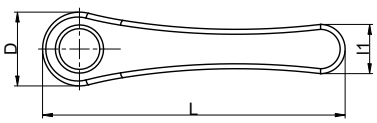

PKCIt

PLASTIC HANDLE BOLTED INOX / Orange

Temperature reslstance: -20°C to +100°C



Product Code	R	d	l	H	D	d1	L	l1	H1	h1	h2	Pckg
PKCIt 63 06 30	63	M6	30	45,5	24	18,5	76	13	52	5	38	10
PKCIt 63 08 30	63	M8	30	45,5	24	18,5	76	13	52	5	38	10
PKCIt 63 10 30	63	M10	30	45,5	24	18,5	76	13	52	5	38	10
PKCIt 63 12 30	63	M12	30	45,5	24	18,5	76	13	52	5	38	10
PKCIt 78 06 30	78	M6	30	45,5	24	18,5	92	13	52	5	38	10
PKCIt 78 08 30	78	M8	30	45,5	24	18,5	92	13	52	5	38	10
PKCIt 78 10 30	78	M10	30	45,5	24	18,5	92	13	52	5	38	10
PKCIt 78 12 30	78	M12	30	45,5	24	18,5	92	13	52	5	38	10

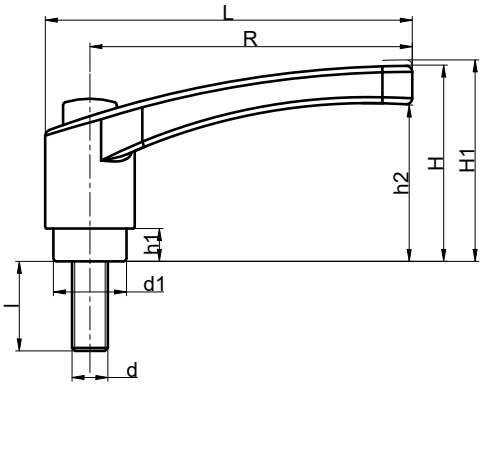

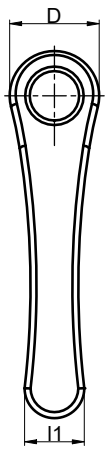

PKBIt

PLASTIC HANDLE BUSEHED INOX / Orange

Temperature reslstance: -20°C to +100°C



Product Code	R	d	d1	D	L	l1	H	H1	h1	h2	Pckg
PKBIt 63 06	63	M6	18,5	24	76	13	45,5	52	5	38	10
PKBIt 63 08	63	M8	18,5	24	76	13	45,5	52	5	38	10
PKBIt 63 10	63	M10	18,5	24	76	13	45,5	52	5	38	10
PKBIt 63 12	63	M12	18,5	24	76	13	45,5	52	5	38	10
PKBIt 78 06	78	M6	18,5	24	92	13	45,5	52	5	38	10
PKBIt 78 08	78	M8	18,5	24	92	13	45,5	52	5	38	10
PKBIt 78 10	78	M10	18,5	24	92	13	45,5	52	5	38	10
PKBIt 78 12	78	M12	18,5	24	92	13	45,5	52	5	38	10

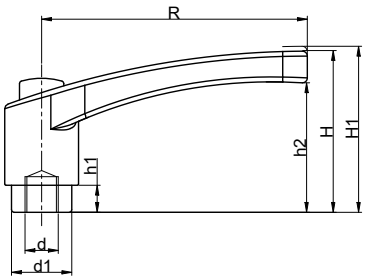

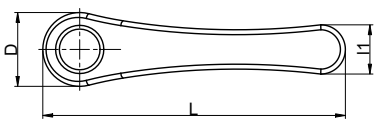

AKCt ALUMINIUM HANDLE BOLTED / Orange



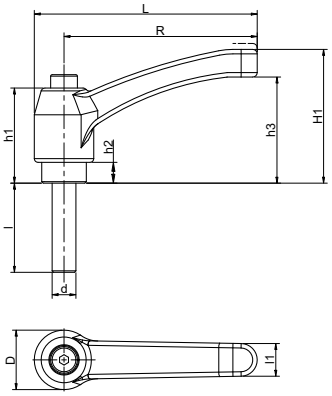

Product Code	R	d	L	D	H	H1	h1	h2	h3	l	Pckg
AKCT 65 05 15	65	M5	75	20	45	49	32	7	35,7	15	10
AKCT 65 05 30	65	M5	75	20	45	49	32	7	35,7	30	10
AKCT 65 06 15	65	M6	75	20	45	49	32	7	35,7	15	10
AKCT 65 06 30	65	M6	75	20	45	49	32	7	35,7	30	10
AKCT 65 06 50	65	M6	75	20	45	49	32	7	35,7	50	10
AKCT 65 08 30	65	M8	75	20	45	49	32	7	35,7	30	10
AKCT 65 08 50	65	M8	75	20	45	49	32	7	35,7	50	10
AKCT 65 10 30	65	M10	75	20	45	49	32	7	35,7	30	10
AKCT 65 10 50	65	M10	75	20	45	49	32	7	35,7	50	10
AKCT 65 12 30	65	M12	75	20	45	49	32	7	35,7	30	10
AKCT 65 12 50	65	M12	75	20	45	49	32	7	35,7	50	10
AKCT 80 06 30	80	M6	91	22	57	61	40	8	45,5	30	10
AKCT 80 06 50	80	M6	91	22	57	61	40	8	45,5	50	10
AKCT 80 08 30	80	M8	91	22	57	61	40	8	45,5	30	10
AKCT 80 08 50	80	M8	91	22	57	61	40	8	45,5	50	10
AKCT 80 10 30	80	M10	91	22	57	61	40	8	45,5	30	10
AKCT 80 10 50	80	M10	91	22	57	61	40	8	45,5	50	10
AKCT 80 12 30	80	M12	91	22	57	61	40	8	45,5	30	10
AKCT 80 12 50	80	M12	91	22	57	61	40	8	45,5	50	10
AKCT 95 12 30	95	M12	108	26	65	69	47	10,5	52	30	10
AKCT 95 12 50	95	M12	108	26	65	69	47	10,5	52	50	10
AKCT 95 14 40	95	M14	108	26	65	69	47	10,5	52	40	10
AKCT 95 14 60	95	M14	108	26	65	69	47	10,5	52	60	10
AKCT 95 16 40	95	M16	108	26	65	69	47	10,5	52	40	10
AKCT 95 16 60	95	M16	108	26	65	69	47	10,5	52	60	10

AKBt ALUMINIUM HANDLE BUSHED / Orange



Product Code	R	d	d1	L	D	H	H1	h1	h2	h3	Pckg
AKBT 65 06	65	M6	15	75	20	45	49	32	7	35,7	10
AKBT 65 08	65	M8	15	75	20	45	49	32	7	35,7	10
AKBT 65 10	65	M10	15	75	20	45	49	32	7	35,7	10
AKBT 80 06	80	M6	17	91	22	57	61	40	8	45,5	10
AKBT 80 08	80	M8	17	91	22	57	61	40	8	45,5	10
AKBT 80 10	80	M10	17	91	22	57	61	40	8	45,5	10
AKBT 80 12	80	M12	17	91	22	57	61	40	8	45,5	10
AKBT 95 12	95	M12	21	108	26	65	69	47	10,5	52	10
AKBT 95 14	95	M14	21	108	26	65	69	47	10,5	52	10
AKBT 95 16	95	M16	21	108	26	65	69	47	10,5	52	10

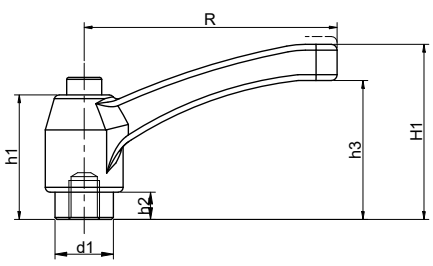

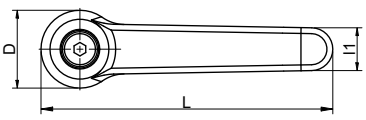

AKC ALUMINIUM HANDLE BOLTED



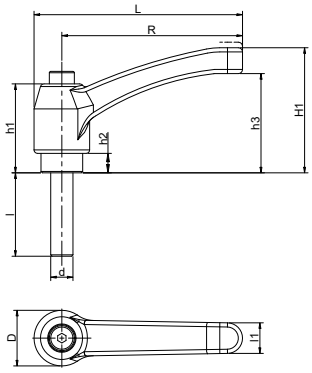

Product Code	R	d	L	D	H	H1	h1	h2	h3	l	Pckg
AKC 65 05 15	65	M5	75	20	45	49	32	7	35,7	15	10
AKC 65 05 30	65	M5	75	20	45	49	32	7	35,7	30	10
AKC 65 06 15	65	M6	75	20	45	49	32	7	35,7	15	10
AKC 65 06 30	65	M6	75	20	45	49	32	7	35,7	30	10
AKC 65 06 50	65	M6	75	20	45	49	32	7	35,7	50	10
AKC 65 08 30	65	M8	75	20	45	49	32	7	35,7	30	10
AKC 65 08 50	65	M8	75	20	45	49	32	7	35,7	50	10
AKC 65 10 30	65	M10	75	20	45	49	32	7	35,7	30	10
AKC 65 10 50	65	M10	75	20	45	49	32	7	35,7	50	10
AKC 65 12 30	65	M12	75	20	45	49	32	7	35,7	30	10
AKC 65 12 50	65	M12	75	20	45	49	32	7	35,7	50	10
AKC 80 06 30	80	M6	91	22	57	61	40	8	45,5	30	10
AKC 80 06 50	80	M6	91	22	57	61	40	8	45,5	50	10
AKC 80 08 30	80	M8	91	22	57	61	40	8	45,5	30	10
AKC 80 08 50	80	M8	91	22	57	61	40	8	45,5	50	10
AKC 80 10 30	80	M10	91	22	57	61	40	8	45,5	30	10
AKC 80 10 50	80	M10	91	22	57	61	40	8	45,5	50	10
AKC 80 12 30	80	M12	91	22	57	61	40	8	45,5	30	10
AKC 80 12 50	80	M12	91	22	57	61	40	8	45,5	50	10
AKC 95 12 30	95	M12	108	26	65	69	47	10,5	52	30	10
AKC 95 12 50	95	M12	108	26	65	69	47	10,5	52	50	10
AKC 95 14 40	95	M14	108	26	65	69	47	10,5	52	40	10
AKC 95 14 60	95	M14	108	26	65	69	47	10,5	52	60	10
AKC 95 16 40	95	M16	108	26	65	69	47	10,5	52	40	10
AKC 95 16 60	95	M16	108	26	65	69	47	10,5	52	60	10

AKB ALUMINIUM HANDLE BUSHED



Product Code	R	d	d1	L	D	H	H1	h1	h2	h3	Pckg
AKB 65 06	65	M6	15	75	20	45	49	32	7	35,7	10
AKB 65 08	65	M8	15	75	20	45	49	32	7	35,7	10
AKB 65 10	65	M10	15	75	20	45	49	32	7	35,7	10
AKB 80 06	80	M6	17	91	22	57	61	40	8	45,5	10
AKB 80 08	80	M8	17	91	22	57	61	40	8	45,5	10
AKB 80 10	80	M10	17	91	22	57	61	40	8	45,5	10
AKB 80 12	80	M12	17	91	22	57	61	40	8	45,5	10
AKB 95 12	95	M12	21	108	26	65	69	47	10,5	52	10
AKB 95 14	95	M14	21	108	26	65	69	47	10,5	52	10
AKB 95 16	95	M16	21	108	26	65	69	47	10,5	52	10

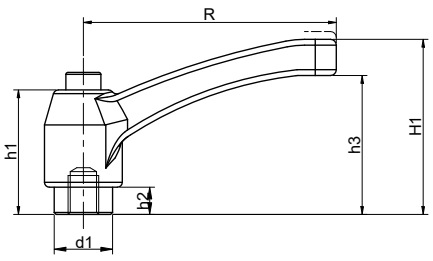

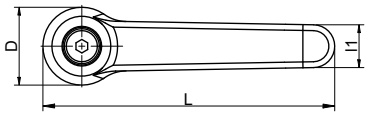

PYCt PLASTIC KNOB BOLTED / Orange



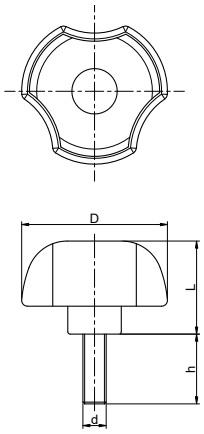

RAL 2004 Orange

Temperature reslstance: -20°C to +100°C

Product Code	D	d	h	Pckg
PYCt 40 06 15	40	M06	15	25
PYCt 40 06 20	40	M06	20	25
PYCt 40 06 30	40	M06	30	25
PYCt 40 06 40	40	M06	40	25
PYCt 40 08 20	40	M08	20	25
PYCt 40 08 30	40	M08	30	25
PYCt 40 08 40	40	M08	40	25
PYCt 40 10 20	40	M10	20	25
PYCt 40 10 30	40	M10	30	25
PYCt 40 10 40	40	M10	40	25
PYCt 40 10 50	40	M10	50	25
PYCt 50 08 20	50	M08	20	25
PYCt 50 08 30	50	M08	30	25
PYCt 50 08 40	50	M08	40	25
PYCt 50 10 20	50	M10	20	25
PYCt 50 10 30	50	M10	30	25
PYCt 50 10 40	50	M10	40	25
PYCt 50 10 50	50	M10	50	25
PYCt 63 10 20	63	M10	20	25
PYCt 63 10 30	63	M10	30	25
PYCt 63 10 40	63	M10	40	25
PCYt 63 10 50	30	M10	50	25
PYCt 63 12 40	63	M12	40	25
PYCt 63 16 50	63	M16	50	25

PYBt PLASTIC KNOB BUSHED / Orange



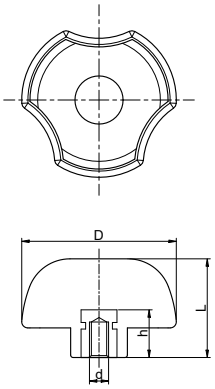

RAL 2004 Orange

Temperature reslstance: -20°C to +100°C

Product Code	D	d	h	Pckg
PYBt 40 06	40	M06	10	25
PYBt 40 08	40	M08	14	25
PYBt 40 10	40	M10	17	25
PYBt 50 08	50	M08	14	25
PYBt 50 10	50	M10	17	25
PYBt 63 10	63	M10	17	25
PYBt 63 12	63	M12	19	25
PYBt 63 16	63	M16	27	25

PYC PLASTIC KNOB BOLTED



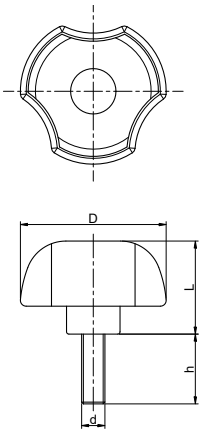

RAL 7021 Black

Temperature reslstance: -20°C to +100°C

Product Code	D	d	h	Pckg
PYC 40 06 15	40	M06	15	25
PYC 40 06 20	40	M06	20	25
PYC 40 06 30	40	M06	30	25
PYC 40 06 40	40	M06	40	25
PYC 40 08 20	40	M08	20	25
PYC 40 08 30	40	M08	30	25
PYC 40 08 40	40	M08	40	25
PYC 40 10 20	40	M10	20	25
PYC 40 10 30	40	M10	30	25
PYC 40 10 40	40	M10	40	25
PYC 40 10 50	40	M10	50	25
PYC 50 08 20	50	M08	20	25
PYC 50 08 30	50	M08	30	25
PYC 50 08 40	50	M08	40	25
PYC 50 10 20	50	M10	20	25
PYC 50 10 30	50	M10	30	25
PYC 50 10 40	50	M10	40	25
PYC 50 10 50	50	M10	50	25
PYC 63 10 20	63	M10	20	25
PYC 63 10 30	63	M10	30	25
PYC 63 10 40	63	M10	40	25
PYC 63 10 50	63	M10	50	25
PYC 63 12 40	63	M12	40	25
PYC 63 16 50	63	M16	50	25

PYB PLASTIC KNOB BUSHED



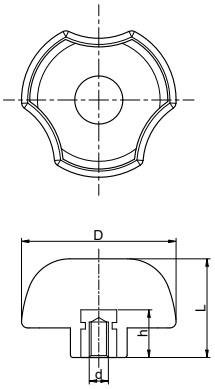

RAL 7021 Black

Temperature reslstance: -20°C to +100°C

Product Code	D	d	h	Pckg
PYB 40 06	40	M06	10	25
PYB 40 08	40	M08	14	25
PYB 40 10	40	M10	17	25
PYB 50 08	50	M08	14	25
PYB 50 10	50	M10	17	25
PYB 63 10	63	M10	17	25
PYB 63 12	63	M12	19	25
PYB 63 16	63	M16	27	25

PYCk

PLASTIC KNOB BOLTED / Red



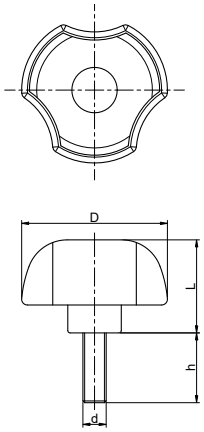

RAL 3000 Red

Temperature reslstance: -20°C to +100°C

Product Code	D	d	h	Pckg
PYCk 40 06 15	40	M06	15	25
PYCk 40 06 20	40	M06	20	25
PYCk 40 06 30	40	M06	30	25
PYCk 40 06 40	40	M06	40	25
PYCk 40 08 20	40	M08	20	25
PYCk 40 08 30	40	M08	30	25
PYCk 40 08 40	40	M08	40	25
PYCk 40 10 20	40	M10	20	25
PYCk 40 10 30	40	M10	30	25
PYCk 40 10 40	40	M10	40	25
PYCk 40 10 50	40	M10	50	25
PYCk 50 08 20	50	M08	20	25
PYCk 50 08 30	50	M08	30	25
PYCk 50 08 40	50	M08	40	25
PYCk 50 10 20	50	M10	20	25
PYCk 50 10 30	50	M10	30	25
PYCk 50 10 40	50	M10	40	25
PYCk 50 10 50	50	M10	50	25
PYCk 63 10 20	63	M10	20	25
PYCk 63 10 30	63	M10	30	25
PYCk 63 10 40	63	M10	40	25
PYCk 63 10 50	63	M10	50	25
PYCk 63 12 40	63	M12	40	25
PYCk 63 16 50	63	M16	50	25

PYBk

PLASTIC KNOB BUSHED / Red



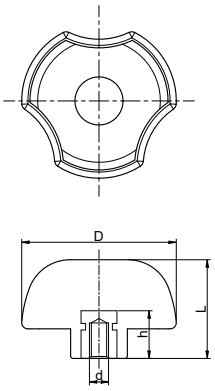

RAL 3000 Red

Temperature reslstance: -20°C to +100°C

Product Code	D	d	h	Pckg
PYBk 40 06	40	M06	10	25
PYBk 40 08	40	M08	14	25
PYBk 40 10	40	M10	17	25
PYBk 50 08	50	M08	14	25
PYBk 50 10	50	M10	17	25
PYBk 63 10	63	M10	17	25
PYBk 63 12	63	M12	19	25
PYBk 63 16	63	M16	27	25

PYCP PLASTIC KNOB BOLTED

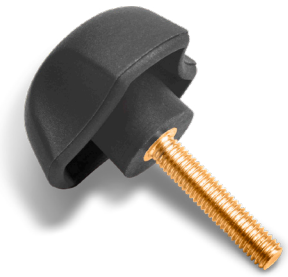

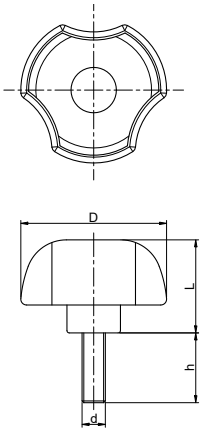

RAL 7021Black

Temperature reslstance: -20°C to +100°C

Product Code	D	d	h	Pckg
PYCP 40 06 15	40	M06	15	25
PYCP 40 06 20	40	M06	20	25
PYCP 40 06 30	40	M06	30	25
PYCP 40 06 40	40	M06	40	25
PYCP 40 08 20	40	M08	20	25
PYCP 40 08 30	40	M08	30	25
PYCP 40 08 40	40	M08	40	25
PYCP 40 10 20	40	M10	20	25
PYCP 40 10 30	40	M10	30	25
PYCP 40 10 40	40	M10	40	25
PYCP 40 10 50	40	M10	50	25
PYCP 50 08 20	50	M08	20	25
PYCP 50 08 30	50	M08	30	25
PYCP 50 08 40	50	M08	40	25
PYCP 50 10 20	50	M10	20	25
PYCP 50 10 30	50	M10	30	25
PYCP 50 10 40	50	M10	40	25
PYCP 50 10 50	50	M10	50	25
PYCP 63 10 20	63	M10	20	25
PYCP 63 10 30	63	M10	30	25
PYCP 63 10 40	63	M10	40	25
PYCP 63 10 50	63	M10	50	25
PYCP 63 12 40	63	M12	40	25
PYCP 63 16 50	63	M16	50	25

PYBP PALSTIC KNOB BUSHED



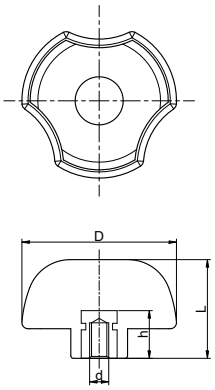

RAL 7021 Black

Temperature reslstance: -20°C to +100°C

Product Code	D	d	h	Pckg
PYBP 40 06	40	M06	10	25
PYBP 40 08	40	M08	14	25
PYBP 40 10	40	M10	17	25
PYBP 50 08	50	M08	14	25
PYBP 50 10	50	M10	17	25
PYBP 63 10	63	M10	17	25
PYBP 63 12	63	M12	19	25
PYBP 63 16	63	M16	27	25

PYCPt

PLASTIC KNOB BOLTED / Orange

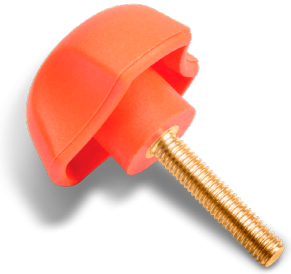

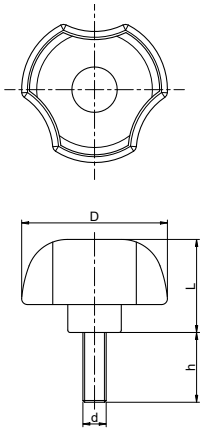

RAL 2004 Orange

Temperature reslstance: -20°C to +100°C

Product Code	D	d	h	Pckg
PYCPt 40 06 15	40	M06	15	25
PYCPt 40 06 20	40	M06	20	25
PYCPt 40 06 30	40	M06	30	25
PYCPt 40 06 40	40	M06	40	25
PYCPt 40 08 20	40	M08	20	25
PYCPt 40 08 30	40	M08	30	25
PYCPt 40 08 40	40	M08	40	25
PYCPt 40 10 20	40	M10	20	25
PYCPt 40 10 30	40	M10	30	25
PYCPt 40 10 40	40	M10	40	25
PYCPt 40 10 50	40	M10	50	25
PYCPt 50 08 20	50	M08	20	25
PYCPt 50 08 30	50	M08	30	25
PYCPt 50 08 40	50	M08	40	25
PYCPt 50 10 20	50	M10	20	25
PYCPt 50 10 30	50	M10	30	25
PYCPt 50 10 40	50	M10	40	25
PYCPt 50 10 50	50	M10	50	25
PYCPt 63 10 20	63	M10	20	25
PYCPt 63 10 30	63	M10	30	25
PYCPt 63 10 40	63	M10	40	25
PYCPt 63 10 50	63	M10	50	25
PYCPt 63 12 40	63	M12	40	25
PYCPt 63 16 50	63	M16	50	25

PYBPt

PLASTIC KNOB BUSHED / Orange



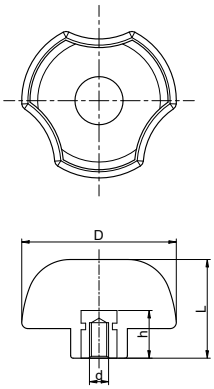

RAL 2004 Orange

Temperature reslstance: -20°C to +100°C

Product Code	D	d	h	Pckg
PYBPt 40 06	40	M06	10	25
PYBPt 40 08	40	M08	14	25
PYBPt 40 10	40	M10	17	25
PYBPt 50 08	50	M08	14	25
PYBPt 50 10	50	M10	17	25
PYBPt 63 10	63	M10	17	25
PYBPt 63 12	63	M12	19	25
PYBPt 63 16	63	M16	27	25

PYCPk

PLASTIC KNOB BOLTED / Red



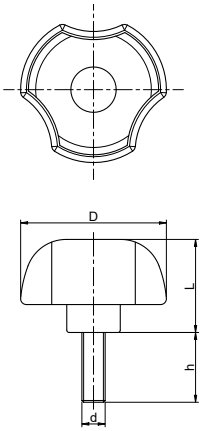

RAL 3000 Red

Temperature reslstance: -20°C to +100°C

Product Code	D	d	h	Pckg
PYCPk 40 06 15	40	M06	15	25
PYCPk 40 06 20	40	M06	20	25
PYCPk 40 06 30	40	M06	30	25
PYCPk 40 06 40	40	M06	40	25
PYCPk 40 08 20	40	M08	20	25
PYCPk 40 08 30	40	M08	30	25
PYCPk 40 08 40	40	M08	40	25
PYCPk 40 10 20	40	M10	20	25
PYCPk 40 10 30	40	M10	30	25
PYCPk 40 10 40	40	M10	40	25
PYCPk 40 10 50	40	M10	50	25
PYCPk 50 08 20	50	M08	20	25
PYCPk 50 08 30	50	M08	30	25
PYCPk 50 08 40	50	M08	40	25
PYCPk 50 10 20	50	M10	20	25
PYCPk 50 10 30	50	M10	30	25
PYCPk 50 10 40	50	M10	40	25
PYCPk 50 10 50	50	M10	50	25
PYCPk 63 10 20	63	M10	20	25
PYCPk 63 10 30	63	M10	30	25
PYCPk 63 10 40	63	M10	40	25
PYCPk 63 10 50	63	M10	50	25
PYCPk 63 12 40	63	M12	40	25
PYCPk 63 16 50	63	M16	50	25

PYBPk

PLASTIC KNOB BUSHED / Red



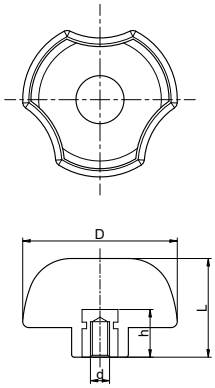

RAL 3000 Red

Temperature reslstance: -20°C to +100°C

Product Code	D	d	h	Pckg
PYBPk 40 06	40	M06	10	25
PYBPk 40 08	40	M08	14	25
PYBPk 40 10	40	M10	17	25
PYBPk 50 08	50	M08	14	25
PYBPk 50 10	50	M10	17	25
PYBPk 63 10	63	M10	17	25
PYBPk 63 12	63	M12	19	25
PYBPk 63 16	63	M16	27	25

PETEKB PLASTIC INDUSTRIAL HANDLE BUSHED

Temperature resIstance: -20°C to +100°C



Product Code	D	L	A	h	h1	d1	d2	Pckg
PETKB 50 05	50	24	15	15	5	M5	14	50
PETKB 50 06	50	24	15	15	5	M6	14	50
PETKB 71 08	71	35	23	25	9	M8	22	50
PETKB 71 10	71	35	23	25	9	M10	22	50
PETKB 71 12	71	35	23	25	9	M12	22	50

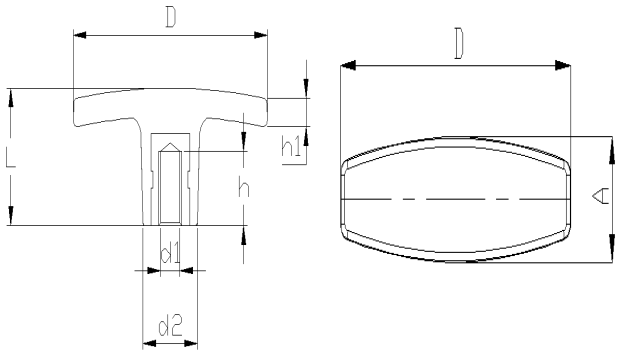

PETEKC PLASTIC INDUSTRIAL HANDLE BOLTED

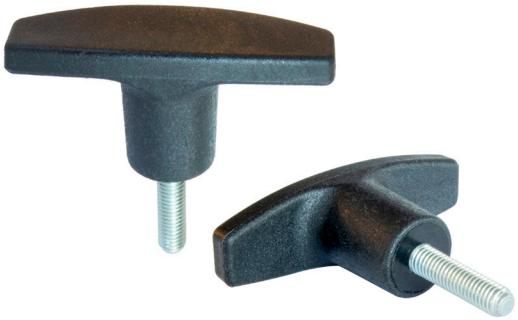

Temperature resIstance: -20°C to +100°C

Product Code	D	L	A	h	d1	d2	Pckg
PETKC 50 05 20	50	24	15	20	M5	14	50
PETKC 50 05 30	50	24	15	30	M5	14	50
PETKC 50 06 20	50	24	15	20	M6	14	50
PETKC 50 06 30	50	24	15	30	M6	14	50
PETKC 71 08 20	71	35	23	20	M8	22	50
PETKC 71 08 30	71	35	23	30	M8	22	50
PETKC 71 08 40	71	35	23	40	M8	22	50
PETKC 71 10 30	71	35	23	30	M10	22	50
PETKC 71 10 40	71	35	23	40	M10	22	50
PETKC 71 10 50	71	35	23	50	M10	22	50
PETKC 71 12 30	71	35	23	30	M12	22	50
PETKC 71 12 40	71	35	23	40	M12	22	50
PETKC 71 12 50	71	35	23	50	M12	22	50

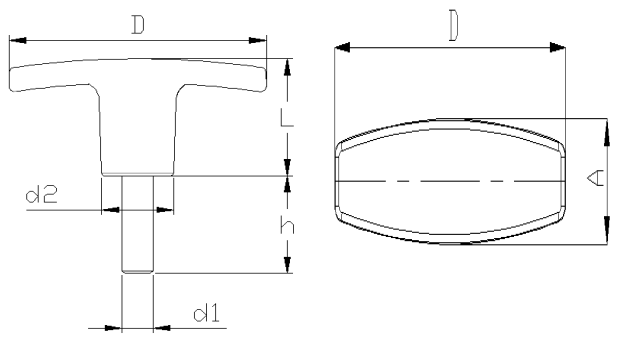

PTB2 PLASTIC KNOB BUSHED / 2



Temperature reslstance: -20°C to +100°C

Product Code	D	d1	d2	h	L	Pckg
PTB2 55 05	55	M5	20	13	31	25
PTB2 55 06	55	M6	20	13	31	25
PTB2 55 08	55	M8	20	17	31	25
PTB2 70 08	70	M8	22	17	35	25
PTB2 70 10	70	M10	22	17	35	25

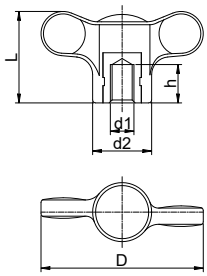

PTC2 PLASTIC KNOB BOLTED / 2



Temperature reslstance: -20°C to +100°C

Product Code	D	d1	d2	h	L	Pckg
PTC2 55 06 25	55	M6	20	25	31	25
PTC2 55 06 40	55	M6	20	40	31	25
PTC2 55 06 50	55	M6	20	50	31	25
PTC2 55 08 25	55	M8	20	25	31	25
PTC2 55 08 40	55	M8	20	40	31	25
PTC2 55 08 50	55	M8	20	50	31	25
PTC2 55 10 25	55	M10	20	25	31	25
PTC2 55 10 40	55	M10	20	40	31	25
PTC2 55 10 50	55	M10	20	50	31	25
PTC2 70 08 30	70	M8	22	30	35	25
PTC2 70 08 40	70	M8	22	40	35	25
PTC2 70 08 50	70	M8	22	50	35	25
PTC2 70 10 25	70	M10	22	25	35	25
PTC2 70 10 40	70	M10	22	40	35	25
PTC2 70 10 50	70	M10	22	50	35	25
PTC2 70 12 30	70	M12	22	30	35	25
PTC2 70 12 40	70	M12	22	40	35	25
PTC2 70 12 50	70	M12	22	50	35	25

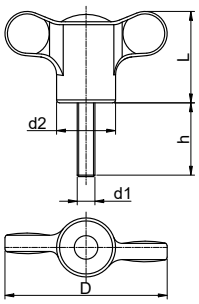

PTB3

PLASTIC KNOB BUSHED / 3



Temperature reslstance: -20°C to +100°C

Product Code	D	d1	d2	H	L	h	h1	Pckg
PTB3 80 10	80	M10	32	30	35	15	19	25
PTB3 80 12	80	M12	32	30	35	20	24	25
PTB3 10 12	100	M12	36	37	42	20	24	25
PTB3 10 14	100	M14	36	37	42	25	29	25
PTB3 10 16	100	M16	36	37	42	25	29	25

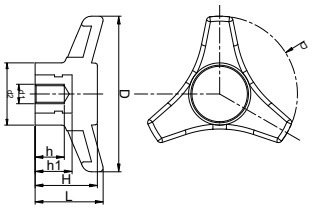

PTB3d

PLASTIC KNOB BUSHED / 3



Temperature reslstance: -20°C to +100°C

Product Code	D	d	d1	d2	H	L	Pckg
PTB3d 80 10	80	28,5	M10	32	30	35	25
PTB3d 80 12	80	28,5	M12	32	30	35	25
PTB3d 10 12	100	28,5	M12	36	37	42	25
PTB3d 10 14	100	28,5	M14	36	37	42	25
PTB3d 10 16	100	28,5	M16	36	37	42	25

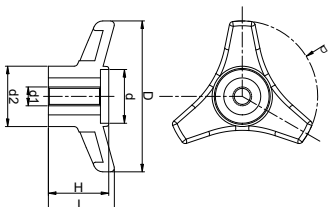

PTC3

PLASTIC KNOB BOLTED / 3



Temperature reslstance: -20°C to +100°C

Product Code	D	d1	d2	H	L	h	Pckg
PTC3 80 10 30	80	M10	32	30	35	30	25
PTC3 80 10 50	80	M10	32	30	35	50	25
PTC3 80 12 30	80	M12	32	30	35	30	25
PTC3 80 12 50	80	M12	32	30	35	50	25
PTC3 10 12 30	100	M12	36	37	42	30	25
PTC3 10 12 50	100	M12	36	37	42	50	25
PTC3 10 14 30	100	M14	36	37	42	30	25
PTC3 10 14 50	100	M14	36	37	42	50	25
PTC3 10 16 30	100	M16	36	37	42	30	25
PTC3 10 16 50	100	M16	36	37	42	50	25

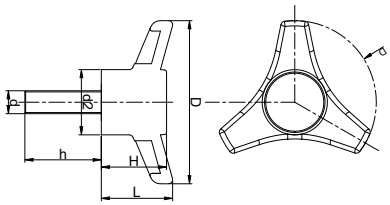

PTC4

PLASTIC KNOB BOLTED / 4



Temperature reslstance: -20°C to +100°C

Product Code	D	d	h	L	Pckg
PTC4 30 06 15	30	M6	15	24	25
PTC4 30 06 20	30	M6	20	24	25
PTC4 30 06 30	30	M6	30	24	25
PTC4 30 06 40	30	M6	40	24	25
PTC4 30 08 20	30	M8	20	24	25
PTC4 30 08 30	30	M8	30	24	25
PTC4 30 08 40	30	M8	40	24	25
PTC4 60 08 20	60	M8	20	34	25
PTC4 60 08 30	60	M8	30	34	25
PTC4 60 08 40	60	M8	40	34	25
PTC4 60 10 20	60	M10	20	34	25
PTC4 60 10 30	60	M10	30	34	25
PTC4 60 10 40	60	M10	40	34	25
PTC4 60 10 50	60	M10	50	34	25
PTC4 60 12 40	60	M12	40	34	25

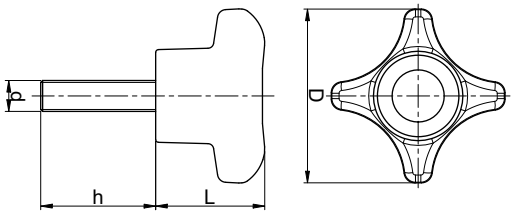

PTB4

PLASTIC KNOB BUSHED / 4



Temperature reslstance: -20°C to +100°C

Product Code	D	d	h	L	Pckg
PTB4 30 06	30	M6	10	24	25
PTB4 30 08	30	M8	14	24	25
PTB4 60 08	60	M8	14	34	25
PTB4 60 10	60	M10	17	34	25
PTB4 60 12	60	M12	19	34	25

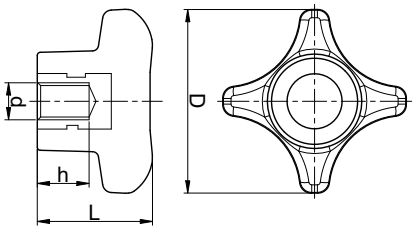

PTB4d

PLASTIC KNOB BUSHED / 4



Temperature reslstance: -20°C to +100°C

Product Code	D	d	h	L	Pckg
PTB4d 60 08	60	M8	14	34	25
PTB4d 60 10	60	M10	17	34	25
PTB4d 60 12	60	M12	19	34	25

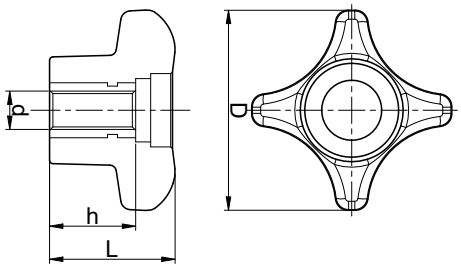

PTB6d

PLASTIC KNOB BUSHED / 6



Temperature reslstance: -20°C to +100°C

Product Code	D	d	h	L	Pckg
PTB6d 63 08	63	M8	14	34	25
PTB6d 63 10	63	M10	17	34	25
PTB6d 63 12	63	M12	19	34	25

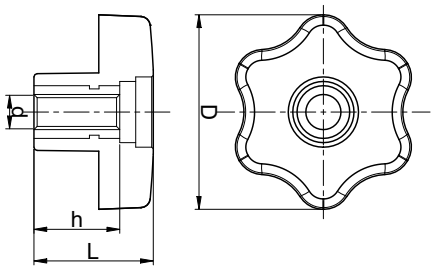

PTC6 PLASTIC KNOB BOLTED / 6

Temperature resIstance: -20°C to +100°C

Product Code	D	d	h	L	Pckg
PTC6 30 06 15	30	M6	15	22	25
PTC6 30 06 20	30	M6	20	22	25
PTC6 30 06 30	30	M6	30	22	25
PTC6 30 06 40	30	M6	40	22	25
PTC6 30 08 20	30	M8	20	22	25
PTC6 30 08 30	30	M8	30	22	25
PTC6 30 08 40	30	M8	40	22	25
PTC6 40 06 15	40	M6	15	24	25
PTC6 4006 20	40	M6	20	24	25
PTC6 40 06 30	40	M6	30	24	25
PTC6 40 06 40	40	M6	40	24	25
PTC6 40 08 20	40	M8	20	24	25
PTC6 40 08 30	40	M8	30	24	25
PTC6 40 08 40	40	M8	40	24	25
PTC6 40 10 20	40	M10	20	24	25
PTC6 40 10 30	40	M10	30	24	25
PTC6 40 10 40	40	M10	40	24	25
PTC6 40 10 50	40	M10	50	24	25
PTC6 63 08 20	63	M8	20	34	25
PTC6 63 08 30	63	M8	30	34	25
PTC6 63 08 40	63	M8	40	34	25
PTC6 63 10 20	63	M10	20	34	25
PTC6 63 10 30	63	M10	30	34	25
PTC6 63 10 40	63	M10	40	34	25
PTC6 63 10 50	63	M10	50	34	25
PTC6 63 12 40	63	M12	40	34	25

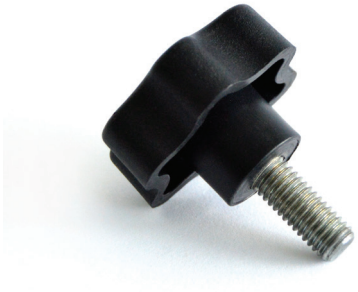

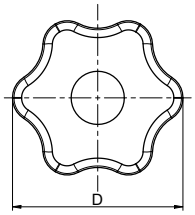

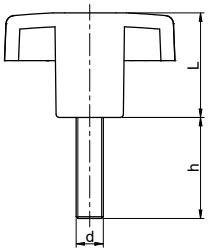

PTB6 PLASTIC KNOB BUSHED / 6

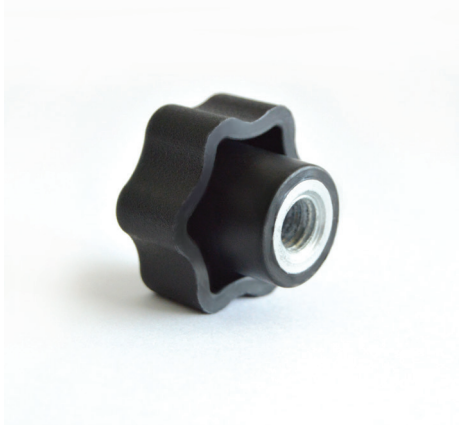

Temperature resIstance: -20°C to +100°C

Product Code	D	d	h	L	Pckg
PTB6 30 06	30	M6	10	22	25
PTB6 30 08	30	M8	14	22	25
PTB6 40 06	40	M6	10	24	25
PTB6 40 08	40	M8	14	24	25
PTB6 40 10	40	M10	15	24	25
PTB6 63 08	63	M8	14	34	25
PTB6 63 10	63	M10	17	34	25
PTB6 63 12	63	M12	19	34	25

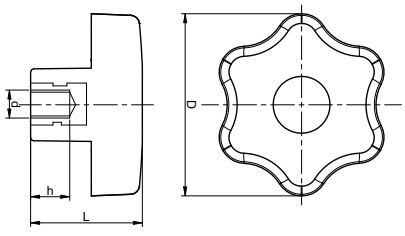

ATB4 ALUMINIUM KNOB 4 BUSHED

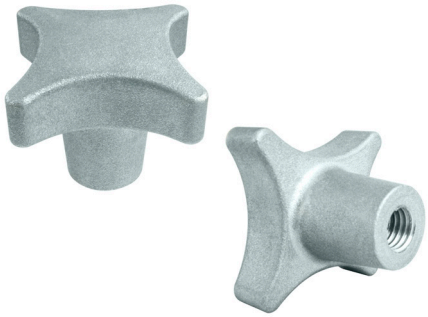

Product Code	D	d	h	L	Pckg
ATB4 40 08	40	M8	14	26	4
ATB4 50 10	50	M10	17	34	4
ATB4 63 12	63	M12	17	42	4

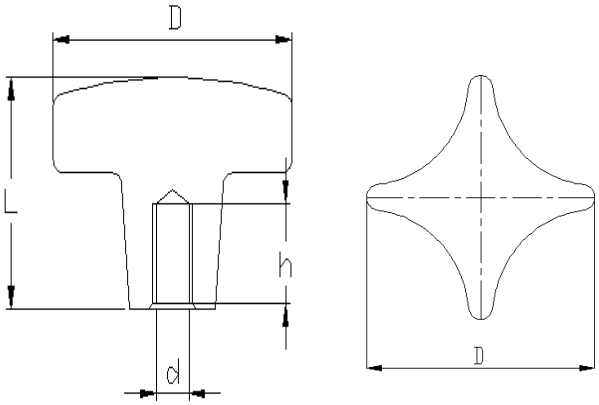

ATC4 ALUMINIUM KNOB 4 BOLTED

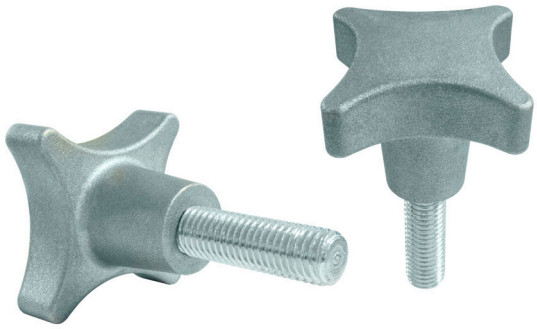

Product Code	D	d	h	L	Pckg
ATC4 40 08 20	40	M8	20	26	4
ATC4 40 08 30	40	M8	30	26	4
ATC4 40 08 40	40	M8	40	26	4
ATC4 50 10 20	50	M10	20	34	4
ATC4 50 10 30	50	M10	30	34	4
ATC4 50 10 40	50	M10	40	34	4
ATC4 63 12 20	63	M12	20	42	4
ATC4 63 12 30	63	M12	30	42	4
ATC4 63 12 40	63	M12	40	42	4

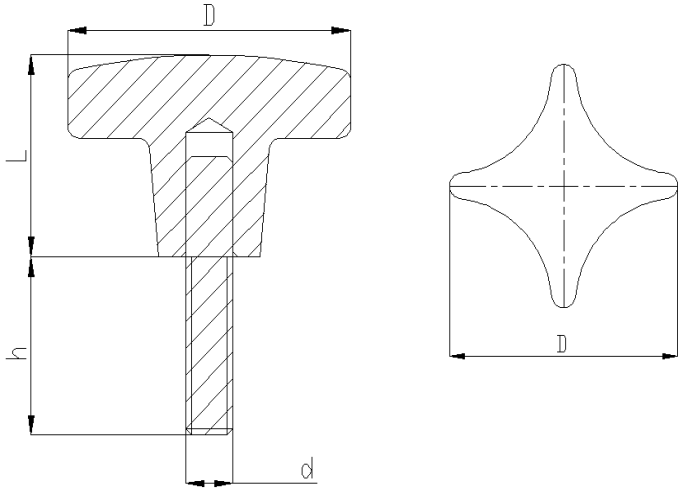

ATB4p ALUMINIUM KNOB 4 BUSHED



Product Code	D	d	h	L	Pckg
ATB4p 40 08	40	M8	14	26	4
ATB4p 50 10	50	M10	17	34	4
ATB4p 63 12	63	M12	17	42	4

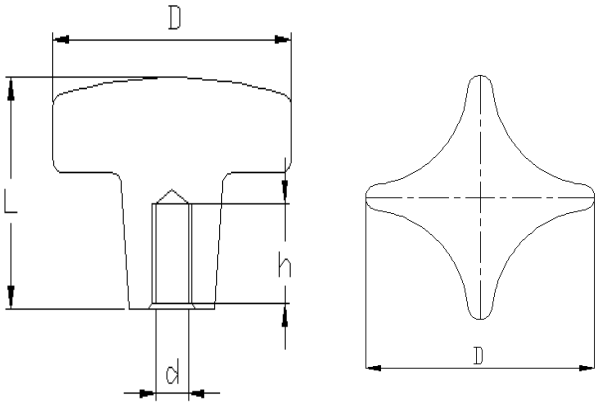

ATC4p ALUMINIUM KNOB 4 BOLTED



Product Code	D	d	h	L	Pckg
ATC4p 40 08 20	40	M8	20	26	4
ATC4p 40 08 30	40	M8	30	26	4
ATC4p 40 08 40	40	M8	40	26	4
ATC4p 50 10 20	50	M10	20	34	4
ATC4p 50 10 30	50	M10	30	34	4
ATC4p 50 10 40	50	M10	40	34	4
ATC4p 63 12 20	63	M12	20	42	4
ATC4p 63 12 30	63	M12	30	42	4
ATC4p 63 12 40	63	M12	40	42	4

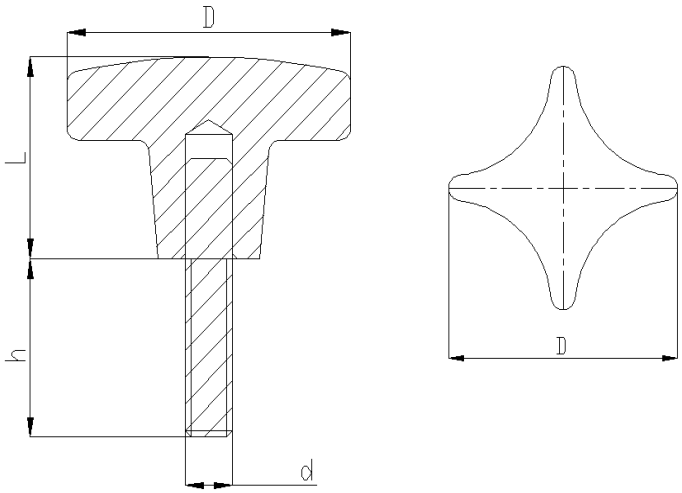

PTBy

PLASTIC BALL BUSHED



Temperature reslstance: -20°C to +100°C

Product Code	D	d	h	Pckg
PTBY 30 06 11	30	M6	11	100
PTBY 30 08 15	30	M8	15	100
PTBY 30 10 17	30	M10	17	100
PTBY 40 08 15	40	M8	15	50
PTBY 40 10 17	40	M10	17	50
PTBY 40 12 22	40	M12	22	50
PTBY 50 10 17	50	M10	17	50
PTBY 50 12 22	50	M12	22	50
PTBY 50 14	50	M14		50
PTBY 50 16	50	M16		50

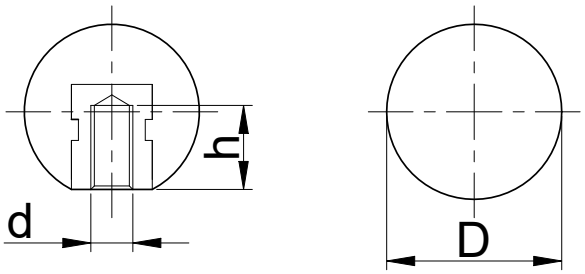

BTB

BAKALITE BALL BUSHED



Product Code	D	d	h	Pckg
BTB 25 05 11	25	M5	11	100
BTB 25 06 11	25	M6	11	100
BTB 25 08 15	25	M8	15	100
BTB 30 06 11	30	M6	11	100
BTB 30 08 15	30	M8	15	100
BTB 30 10 17	30	M10	17	100
BTB 35 08 15	35	M8	15	50
BTB 35 10 17	35	M10	17	50
BTB 40 08 15	40	M8	15	50
BTB 40 10 17	40	M10	17	50
BTB 40 12 22	40	M12	22	50

RAL 9005 Brlght Black
Zlnc Plated Bushlng / Iron Bolt
Reslstant to Olls, Greases and Solvents
-30°C to +120°C

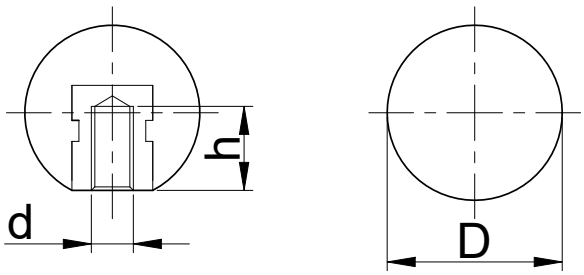

BKC BAKALITE KNOB BOLTED



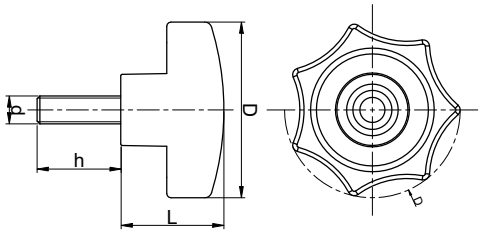

Product Code	D	d	h	L	Pckg
BKC 20 05 13	20	M5	13	15	100
BKC 20 06 10	20	M6	10	15	100
BKC 30 06 15	30	M6	15	27	100
BKC 30 08 15	30	M8	15	27	100
BKC 40 06 15	40	M6	15	28	50
BKC 40 06 20	40	M6	20	28	50
BKC 40 08 15	40	M8	15	28	50
BKC 40 08 20	40	M8	20	28	50
BKC 40 08 50	40	M8	50	28	50
BKC 40 10 20	40	M10	20	28	50
BKC 50 08 25	50	M8	25	32	50
BKC 50 10 25	50	M10	25	32	50
BKC 50 10 30	50	M10	30	32	50
BKC 63 08 25	63	M8	25	37	50
BKC 63 10 30	63	M10	30	37	50
BKC 63 12 30	63	M12	30	37	50
BKC 63 12 35	63	M12	35	37	50
BKC 70 10 35	70	M10	35	40	50
BKC 70 12 35	70	M12	35	40	50

Special dimensions are available upon request.

RAL 9005 Bright Black
Zinc Plated Bushing / Iron Bolt
Resistant to Oils, Greases and Solvents
-30°C to +120°C

BKB BAKALITE KNOB BUSHED



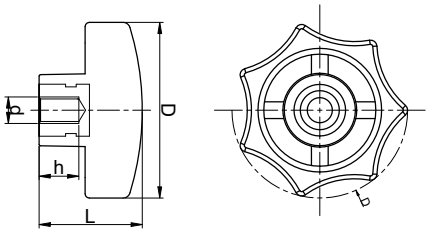

Product Code	D	d	h	L	Pckg
BKB 20 05 11	20	M5	11	15	100
BKB 20 06 11	20	M6	11	15	100
BKB 30 06 11	30	M6	11	27	100
BKB 30 08 15	30	M8	15	27	100
BKB 40 06 11	40	M6	11	28	50
BKB 40 08 15	40	M8	15	28	50
BKB 40 08 20	40	M8	20	28	50
BKB 40 10 17	40	M10	17	28	50
BKB 50 08 15	50	M8	15	32	50
BKB 50 10 17	50	M10	17	32	50
BKB 63 08 15	63	M8	15	37	50
BKB 63 10 17	63	M10	17	37	50
BKB 63 12 22	63	M12	22	37	50
BKB 70 10 17	70	M10	17	40	50
BKB 70 12 22	70	M12	22	40	50

RAL 9005 Bright Black
Zinc Plated Bushing / Iron Bolt
Resistant to Oils, Greases and Solvents
-30°C to +120°C

BYC BAKALITE KNOB BOLTED



Product Code	D	d	h	L	Pckg
BYC 30 06 15	30	M6	15	20	100
BYC 30 06 25	30	M6	25	20	100
BYC 30 08 15	30	M8	15	20	100
BYC 40 06 20	40	M6	20	25	100
BYC 40 08 20	40	M8	20	25	100
BYC 40 10 20	40	M10	20	25	100
BYC 50 08 25	50	M8	25	32	50
BYC 50 10 25	50	M10	25	32	50
BYC 63 08 25	63	M8	25	42	50
BYC 63 10 30	63	M10	30	42	50
BYC 63 12 30	63	M12	30	42	50
BYC 63 12 35	63	M12	35	42	50

RAL 9005 Brlght Black
Zlnc Plated Bushlng / Iron Bolt
Reslstant to Olls, Greases and Solvents
-30°C to +120°C

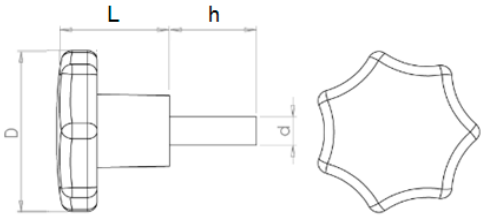

BYB BAKALITE KNOB BUSHED



Product Code	D	d	h	L	Pckg
BYB 30 06 11	30	M6	11	20	100
BYB 30 08 15	30	M8	15	20	100
BYB 40 06 11	40	M6	11	25	100
BYB 40 08 15	40	M8	15	25	100
BYB 40 10 17	40	M10	17	25	100
BYB 50 08 15	50	M8	15	32	50
BYB 50 10 17	50	M10	17	32	50
BYB 63 08 15	63	M8	15	42	50
BYB 63 10 17	63	M10	17	42	50
BYB 63 12 22	63	M12	22	42	50

RAL 9005 Brlght Black
Zlnc Plated Bushlng / Iron Bolt
Reslstant to Olls, Greases and Solvents
-30°C to +120°C

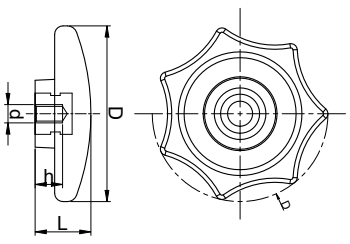

BSC BAKALITE HANDLE BOLTED



Product Code	D	d	h	L	Pckg
BSC 18 06 15	18	M6	15	40	50
BSC 21 08 15	21	M8	15	51	50
BSC 21 10 15	21	M10	15	51	50
BSC 23 08 20	23	M8	20	66	50
BSC 23 10 20	23	M10	20	66	50
BSC 26 10 25	26	M10	25	80	50
BSC 26 12 25	26	M12	25	80	50
BSC 28 10 25	28	M10	25	91	25
BSC 28 12 25	28	M12	25	91	25

RAL 9005 Brlght Black
ZInc Plated Bushlng / Iron Bolt
Reslstant to Olls, Greases and Solvents
-30°C to +120°C

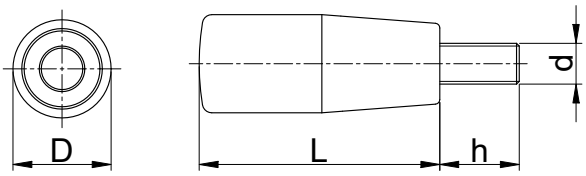

BSB BAKALITE HANDLE BUSHED



Product Code	D	d	h	L	Pckg
BSB 18 06 11	18	M6	11	40	50
BSB 21 08 15	21	M8	15	51	50
BSB 21 10 17	21	M10	17	51	50
BSB 23 08 15	23	M8	15	66	50
BSB 23 10 17	23	M10	17	66	50
BSB 26 10 17	26	M10	17	80	50
BSB 26 12 22	26	M12	22	80	50
BSB 28 10 17	28	M10	17	90	25
BSB 28 12 22	28	M12	22	90	25

RAL 9005 Brlght Black
ZInc Plated Bushlng / Iron Bolt
Reslstant to Olls, Greases and Solvents
-30°C to +120°C

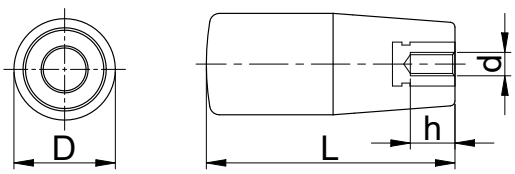

BTV BAKALITE HANDWHEEL



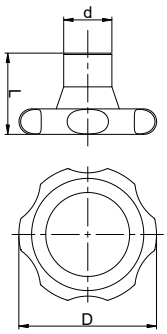

Product Code	D	d	L	Pckg
BTV 45 20 11	45	20	33	10
BTV 80 30 25	80	30	50	5
BTV 10 35 25	100	35	59	5

RAL 9005 Brlght Black
ZInc Plated Bushlng / Iron Bolt
Reslstant to Olls, Greases and Solvents
-30°C to +120°C

BTVB BAKALITE BUSHED HANDWHEEL



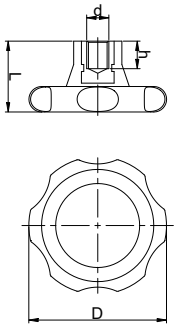

Product Code	D	d	h	L	Pckg
BTVB 45 08 20	45	M8	20	30	10
BTVB 45 10 20	45	M10	20	30	10
BTVB 65 10 25	65	M10	25	27	10
BTVB 65 12 25	65	M12	25	27	10
BTVB 80 16 40	80	M16	40	50	5
BTVB 10 20 40	100	M20	40	60	5

RAL 9005 Brlght Black
ZInc Plated Bushlng / Iron Bolt
Reslstant to Olls, Greases and Solvents
-30°C to +120°C

BTVC BAKALITE HANDWHEEL BOLTED



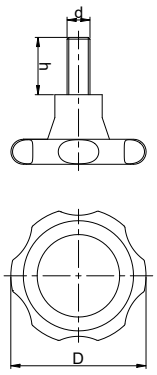

Product Code	D	d	h	Pckg
BTVC 65 12 60	65	M12	60	10
BTVC 80 16 50	80	M16	50	5
BTVC 80 16 60	80	M16	60	5

RAL 9005 Brlght Black
ZInc Plated Bushlng / Iron Bolt
Reslstant to Olls, Greases and Solvents
-30°C to +120°C

BTVBb

BAKALITE HANDWHEEL BUSHED / Empty



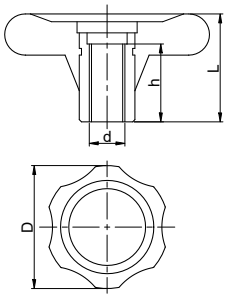

Product Code	D	d	h	L	Pckg
BTVBb 45 08 15	45	8	15	30	10
BTVBb 45 10 15	45	10	15	30	10
BTVBb 45 12 15	45	12	15	30	10
BTVBb 65 10 20	65	10	20	27	10
BTVBb 65 10 25	65	10	25	27	10
BTVBb 65 12 20	65	12	20	27	10
BTVBb 65 12 25	65	12	25	27	10
BTVBb 80 10 25	80	10	25	48	5
BTVBb 80 12 25	80	12	25	48	5
BTVBb 80 14 25	80	14	25	48	5
BTVBb 80 16 25	80	16	25	48	5
BTVBb 10 16 30	100	16	30	59	5
BTVBb 10 20 30	100	20	30	59	5

RAL 9005 Brlght Black
Zlnc Plated Bushlng / Iron Bolt
Reslstant to Olls, Greases and Solvents
-30°C to +120°C

BDV

BAKALITE HANDWHEEL



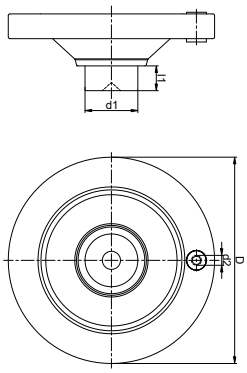

Product Code	D	d1	l1	d2	Pckg
BDV 10 30 15	100	30	14	M6	6
BDV 12 32 15	125	32	15	M6	4
BDV 15 32 15	150	32	15	M8	4
BDV 17 40 15	175	40	15	M10	2
BDV 20 40 15	200	40	15	M12	2

RAL 9005 Brlght Black
Zlnc Plated Bushlng / Iron Bolt
Reslstant to Olls, Greases and Solvents
-30°C to +120°C

BKV

BAKALITE HANDWHEEL



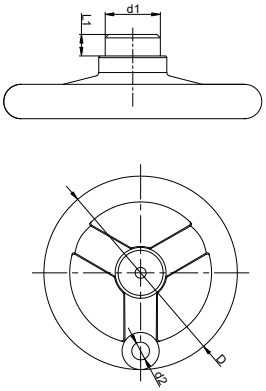

Product Code	D	d1	l1	d2	Pckg
BKV 10 30 12	100	30	12	M6	6
BKV 12 40 15	125	40	15	M6	4
BKV 15 40 15	150	40	15	M8	4
BKV 15 50 15	150	50	15	M8	4
BKV 17 50 18	175	50	18	M10	2
BKV 20 50 18	200	50	18	M12	2

RAL 9005 Brlght Black
Zlnc Plated Bushlng / Iron Bolt
Reslstant to Olls, Greases and Solvents
-30°C to +120°C

IM INOX HINGE

316



Product Code	L1xL2	d	Pckg
IM 40X40	25x25	5,5x4	10
IM 50X50	30x30	6,6x4	10
IM 50X63	30x43	6,6x4	10
IM 50X76	30x56	6,6x4	10
IM 60X60	36x36	6,6	10
IM 60X98	36x73	6,6x4	10

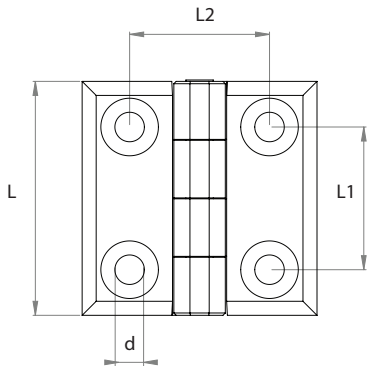

SIM STEEL SHEET HINGE INOX

304



Product Code	L1xL2	d	Pckg
SIM 50X50 4 delikli	30x30	6	10
SIM 50X75 5 delikli	30x55	6	10
SIM 50X100 6 delikli	30x80	6	10

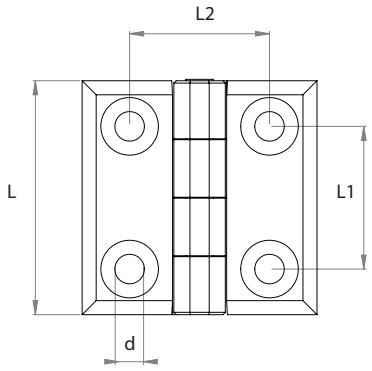

PM PLASTIC HINGE



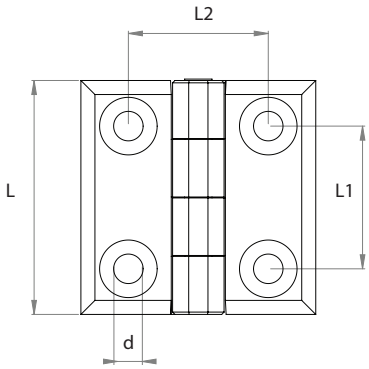

Product Code	L1xL2	d	Pckg
PM 40X40	25x25	5,5	50
PM 48X48	30x30	5,5	50
PM 50X50	30x30	6,5	50
PM 75X65	72x45	6,5	50
PM 100X80	72x45	8,5	50

ZMb PLASTIC HINGE PAINTED



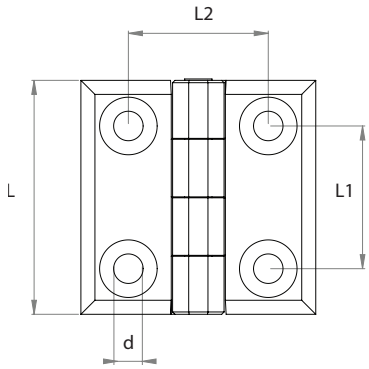

Product Code	L1xL2	d	Pckg
ZMb 40X40	25x25	5,5	50
ZMb 50X50	30x30	6,5	50
ZMb 50X63	30x43	6,5	50
ZMb 50X76	30x56	6,5	50
ZMb 60X60	36x36	8	50

ZMk ZAMAK HINGE CHROMED



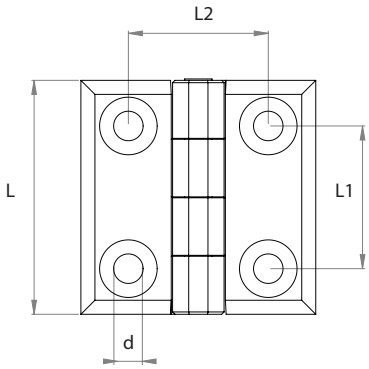

Product Code	L1xL2	d	Pckg
ZMk 40X40	25x25	5,5	50
ZMk 50X50	30x30	6,5	50
ZMk 50X63	30x43	6,5	50
ZMk 50X76	30x56	6,5	50
ZMk 60X60	36x36	8	50

ZMCk ZAMAK HINGE BOLTED and CHROMED



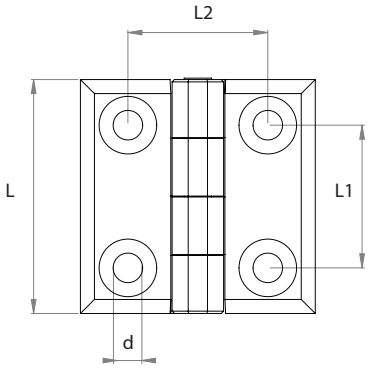

Product Code	L1xL2	d	Pckg
ZMCk 40X40	25x25	M5x9	25
ZMCk 50X50	30x30	M6x12	25
ZMCk 50X63	30x43	M6x12	25
ZMCk 50X76	30x56	M6x12	25
ZMCk 60X60	36x36	M8x14	25

PMC PLASTIC HINGE BOLTED



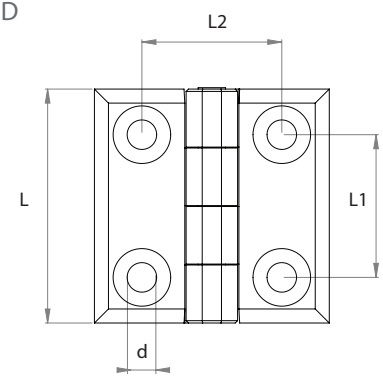

Product Code	L1xL2	d	Pckg
PMC 40X40	25x25	M5x9	50
PMC 48X48	30x30	M5x12	50
PMC 50X50	30x30	M6x11	50

ZMCb ZAMAK HINGE BOLTED and PAINTED



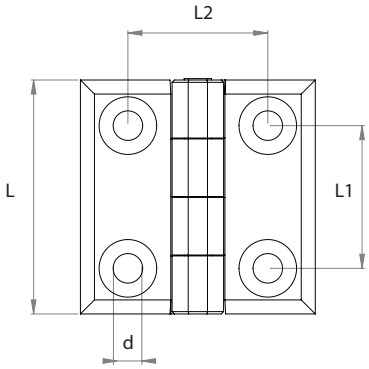

Product Code	L1xL2	d	Pckg
ZMCb 40X40	25x25	M5x9	25
ZMCb 50X50	30x30	M6x12	20
ZMCb 50X63	30x43	M6x12	25
ZMCb 50X76	30x56	M6x12	25
ZMCb 60x60	36x36	M8x14	12

SMb STEEL SHEET HINGE PAINTED



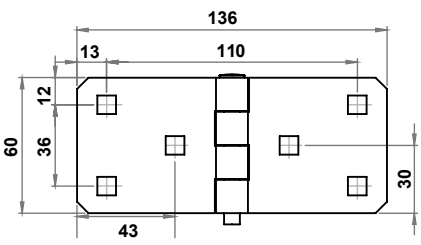

Product Code	L1xL2	d	Pckg
SMb 60X76 4 Holes	36x50	8,30	25
SMb 60X106 5 Holes	36x80	8,30	25
SMb 60X136 6 Holes	36x110	8,30	25

SMb PAINTED SHEET METAL HINGE

New Product



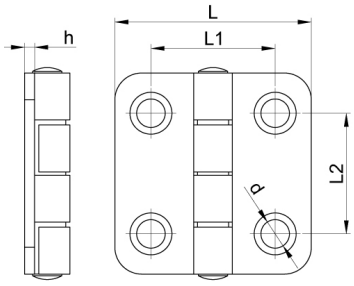

Product Code	L1xL2	d	h	Pckg
SMb 40X40	25x25	5, 3x4	2	25
SMb 50X50	30x30	6, 3x4	2,5	25
SMb 60X60	36x39	8, 3x4	3	25

SMk CHROME-PLATED SHEET METAL HINGE

New Product



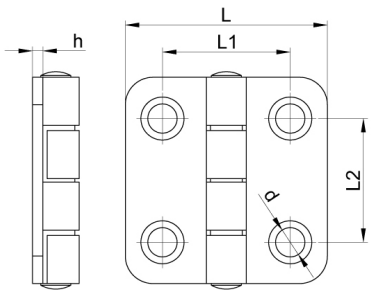

Product Code	L1xL2	d	h	Pckg
SMk 40X40	25x25	5, 3x4	2	25
SMk 50X50	30x30	6, 3x4	2,5	25
SMk 60X60	36x39	8, 3x4	3	25

MI LATCH INOKS



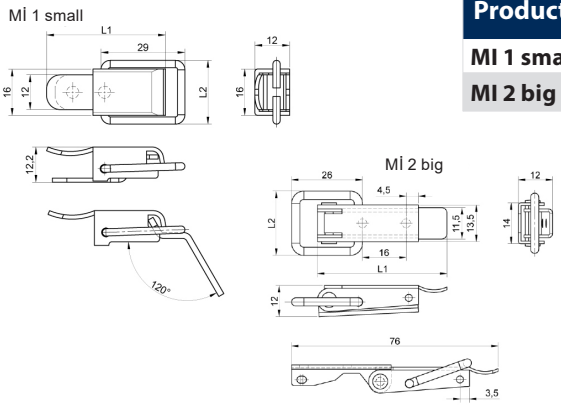

Product Code	L1	L2	Pckg
MI 1 small	41	22	10
MI 2 big	48	23,5	10

DI LATCH DILI INOKS



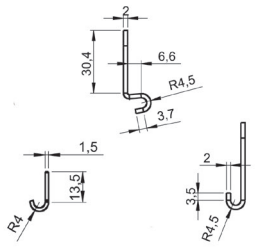

Product Code	L1	R	Pckg
DI-K	13,5	4	10
DI-B	32,45	4,5	10
DI-L	30,4	4,5	10

M LATCH



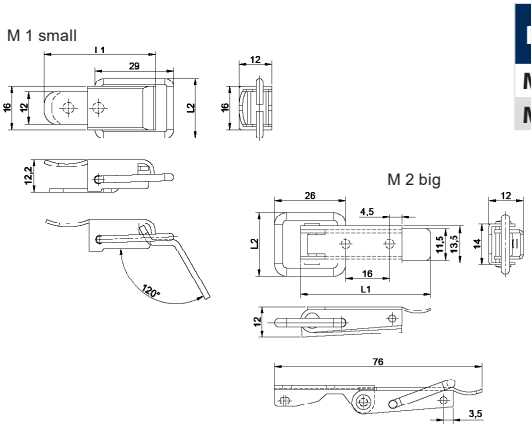

Product Code	L1	L2	Pckg
M 1 small	41	22	10
M 2 big	48	23,5	10

D LATCH



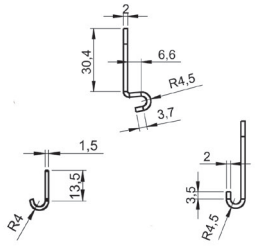

Product Code	L1	R	Pckg
D-K	13,5	4	10
D-B	32,45	4,5	10
D-L	30,4	4,5	10

YPKk QUARTER TURN SPRING - WING



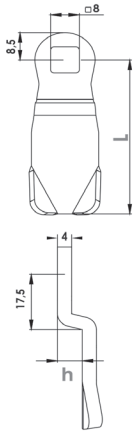

Product Code	h	L	Pckg
YPKk 1.0.50	0	50	50
YPKk 1.5.48	5	48	50
YPKk 1.7.48	7	48	50

YPKb QUARTER TURN SPRING - PAINTED



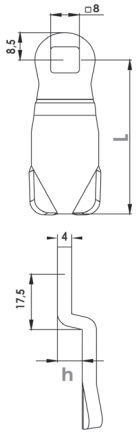

Product Code	h	L	Pckg
YPKb 1.0.50	0	50	50
YPKb 1.5.48	5	48	50
YPKb 1.7.48	7	48	50

YPKp QUARTER TURN SPRING - PLASTIC



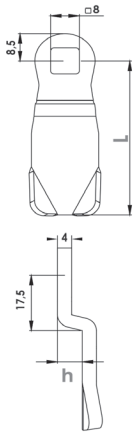

Product Code	h	L	Pckg
YPKp 1.0.50	0	50	50
YPKp 1.5.48	5	48	50
YPKp 1.7.48	7	48	50

YPK2

QUARTER TURN SPRING DB



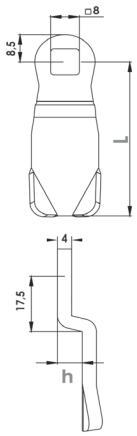

Product Code	h	L	Pckg
YPK 2.0.50	0	50	50
YPK 2.5.48	5	48	50
YPK 2.7.48	7	48	50

YPK3

QUARTER TURN SPRING TRIANGLE



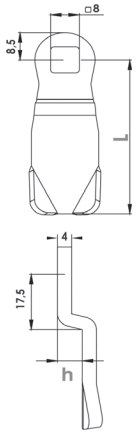

Product Code	h	L	Pckg
YPK 3.0.50	0	50	50
YPK 3.5.48	5	48	50
YPK 3.7.48	7	48	50

YPK4

QUARTER TURN SPRING SQUARE



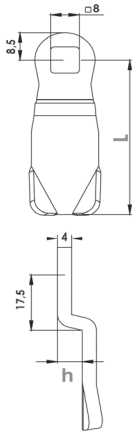

Product Code	h	L	Pckg
YPK 4.0.50	0	50	50
YPK 4.5.48	5	48	50
YPK 4.7.48	7	48	50

METAL KEY



Product Code	Pckg
A 2.5mm DB	50
A 3.9mmTRIANGLE	50
A 4.8mm SQUARE	50

SRK SLIDING SLATCH

Product Code	Pkt
SRK 49X5X19X20,5	50



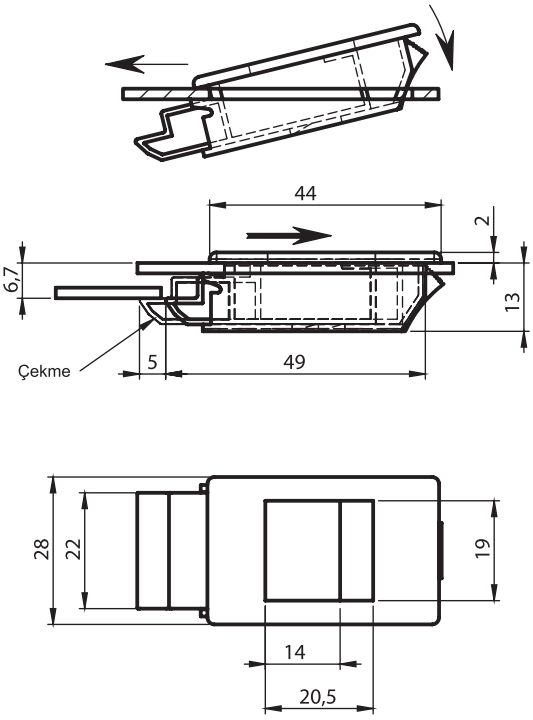

SKK BRIDGE CLAMP

Product Code	Pkt
SKK 46X21,5XM8	25



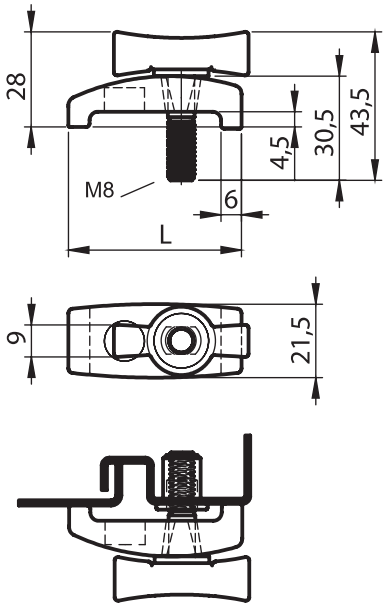

YDKb PAINTED FIRE CABINET LOCK

New Product

Product Code	Pckg
YDKb 66	1



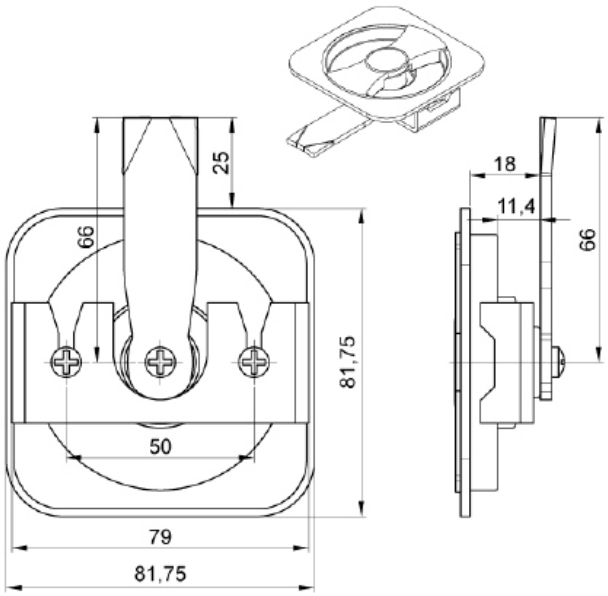

YDKk CHROME-PLATED FIRE CABINET LOCK

New Product

Product Code	Pckg
YDKk 66	1



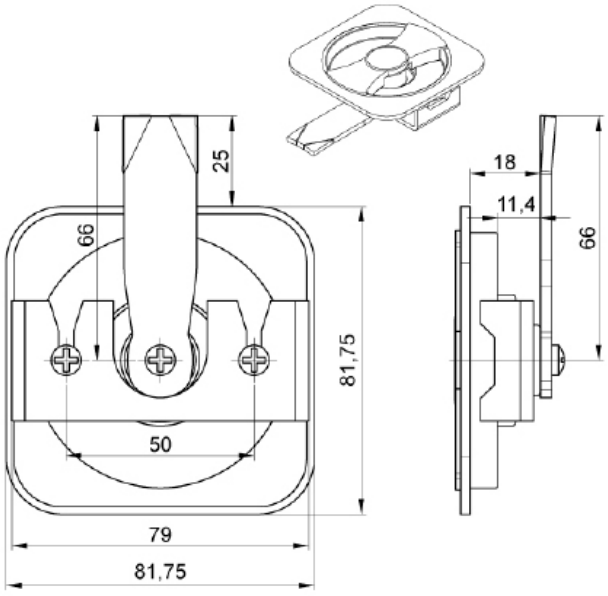

TCBp ANTI-VIBRATION RUBBER MOUND / Bushed



MaterIal Natural Rubber
Metal ZInc Coated
Hardness 70 ±5 Shore
Temperature Reslstant -20°C/+ 80°C

Product Code	D	l1	d	h	Pckg
TCBp 1520	15	20	M 4	10	25
TCBp 2015	20	15	M 6	15	25
TCBp 2020	20	20	M 6	15	25
TCBp 2515	25	15	M 6	18	25
TCBp 2520	25	20	M 6	18	25
TCBp 2525	25	25	M 6	18	25
TCBp 3015	30	15	M 8	20	25
TCBp 3020	30	20	M 8	20	25
TCBp 3025	30	25	M 8	20	25
TCBp 3030	30	30	M 8	20	25
TCBp 3040	30	40	M 8	20	25
TCBp 4020	40	20	M 8	20	25
TCBp 4025	40	25	M 8	20	25
TCBp 4030	40	30	M 8	20	25
TCBp 4040	40	40	M 8	20	25
TCBp 4535	45	35	M 8	28	25
TCBp 5020	50	20	M 10	28	25
TCBp 5025	50	25	M 10	28	25
TCBp 5030	50	30	M 10	28	25
TCBp 5035	50	35	M 10	28	25
TCBp 5040	50	40	M 10	28	25
TCBp 5045	50	45	M 10	28	25
TCBp 5050	50	50	M 10	28	25
TCBp 6030	60	30	M 12	32	25
TCBp 6035	60	35	M 12	32	25
TCBp 6040	60	40	M 12	32	25
TCBp 7035	70	35	M 12	37	25
TCBp 7040	70	40	M 12	37	25
TCBp 7045	70	45	M 12	37	25
TCBp 7545	75	45	M 12	37	25
TCBp 7550	75	50	M 12	37	25
TCBp 7555	75	55	M 12	37	25
TCBp 7570	75	70	M 12	37	25
TCBp 10050	100	50	M 16	42	25
TCBp 10055	100	55	M 16	42	25
TCBp 10060	100	60	M 16	42	25
TCBp 10075	100	75	M 16	42	25
TCBp 12540	125	40	M 16	42	25
TCBp 15050	150	50	M 20	42	25

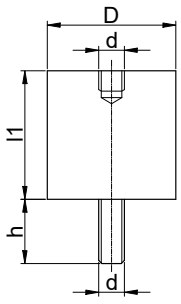

TCCp ANTI-VIBRATION RUBBER MOUND / Double Bolted



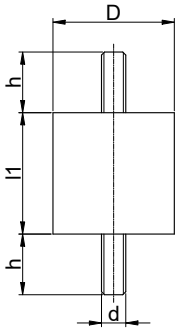

MaterIal Natural Rubber
Metal ZInc Coated
Hardness 70 ±5 Shore
Temperature Reslstant -20°C/+ 80°C

Product Code	D	l1	d	h	Pckg
TCCp 1515	15	15	M 4	10	25
TCCp 1520	15	20	M 4	10	25
TCCp 2015	20	15	M 6	15	25
TCCp 2020	20	20	M 6	15	25
TCCp 2025	20	25	M 6	15	25
TCCp 2030	20	30	M 6	15	25
TCCp 2510	25	10	M 6	18	25
TCCp 2515	25	15	M 6	18	25
TCCp 2520	25	20	M 6	18	25
TCCp 2530	25	30	M 6	18	25
TCCp 3015	30	15	M 8	20	25
TCCp 3020	30	20	M 8	20	25
TCCp 3025	30	25	M 8	20	25
TCCp 3030	30	30	M 8	20	25
TCCp 3040	30	40	M 8	20	25
TCCp 3535	35	35	M 8	20	25
TCCp 4020	40	20	M 8	20	25
TCCp 4025	40	25	M 8	20	25
TCCp 4030	40	30	M 8	20	25
TCCp 4040	40	40	M 8	20	25
TCCp 4525	45	25	M 8	20	25
TCCp 5020	50	20	M 10	28	25
TCCp 5025	50	25	M 10	28	25
TCCp 5030	50	30	M 10	28	25
TCCp 5035	50	35	M 10	28	25
TCCp 5040	50	40	M 10	28	25
TCCp 5045	50	45	M 10	28	25
TCCp 5050	50	50	M 10	28	25
TCCp 6030	60	30	M 12	32	25
TCCp 6035	60	35	M 12	32	25
TCCp 6040	60	40	M 12	32	25
TCCp 7035	70	35	M 12	37	25
TCCp 7040	70	40	M 12	37	25
TCCp 7045	70	45	M 12	37	25
TCCp 7525	75	25	M 12	37	25
TCCp 7530	75	30	M 12	37	25
TCCp 7540	75	40	M 12	37	25
TCCp 7550	75	50	M 12	37	25
TCCp 7555	75	55	M 12	37	25
TCCp 7570	75	70	M 12	37	25
TCCp 10040	100	40	M 16	42	25
TCCp 10050	100	50	M 16	42	25
TCCp 10055	100	55	M 16	42	25
TCCp 10060	100	60	M 16	42	25
TCCp 10075	100	75	M 16	42	25
TCCp 12540	125	40	M 16	42	25
TCCp 15050	150	50	M 20	42	25

TBBP ANTI-VIBRATION RUBBER MOUND / Double Bushed

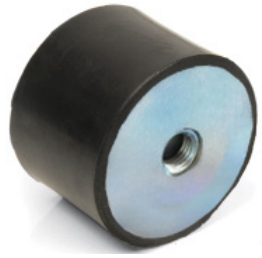

MaterIal Natural Rubber
Metal ZInc Coated
Hardness 70 ±5 Shore
Temperature ResIstant -20°C/+ 80°C

Product Code	D	l1	d	h	Pckg
TBBp 2020	20	20	M 6	6	25
TBBp 2030	20	30	M 6	6	25
TBBp 2525	25	25	M 6	6	25
TBBp 3020	30	20	M 8	8	25
TBBp 3025	30	25	M 8	8	25
TBBp 3030	30	30	M 8	8	25
TBBp 3040	30	40	M 8	8	25
TBBp 3535	35	35	M 8	8	25
TBBp 4020	40	20	M 8	8	25
TBBp 4025	40	25	M 8	8	25
TBBp 4030	40	30	M 8	8	25
TBBp 4040	40	40	M 8	8	25
TBBp 4525	45	25	M 8	8	25
TBBp 4535	45	35	M 8	10	25
TBBp 5025	50	25	M 10	10	25
TBBp 5030	50	30	M 10	10	25
TBBp 5035	50	35	M 10	10	25
TBBp 5040	50	40	M 10	10	25
TBBp 5045	50	45	M 10	10	25
TBBp 5050	50	50	M 10	10	25
TBBp 6030	60	30	M 12	12	25
TBBp 6035	60	35	M 12	12	25
TBBp 6040	60	40	M 12	12	25
TBBp 7045	70	45	M 12	12	25
TBBp 7555	75	55	M 12	12	25
TBBp 10050	100	50	M16	16	25
TBBp 10055	100	55	M16	16	25
TBBp 10060	100	60	M16	16	25
TBBp 10075	100	75	M16	16	25

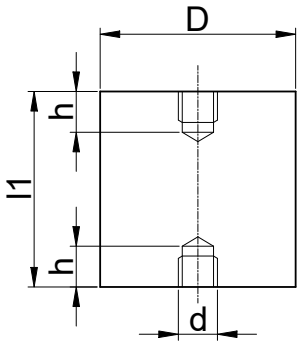

TBp ANTI-VIBRATION RUBBER MOUND / Bushed

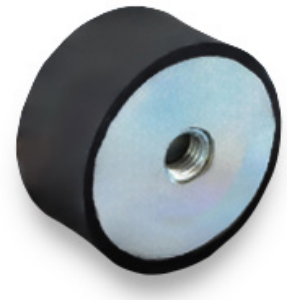

MaterIal Natural Rubber
Metal ZInc Coated
Hardness 70 ±5 Shore
Temperature ResIstant -20°C/+ 80°C

Product Code	D	l1	d	h	Pckg
TBp 1520	15	20	M 4	4	25
TBp 2020	20	20	M 6	6	25
TBp 2030	20	30	M 6	6	25
TBp 2525	25	25	M 6	6	25
TBp 3020	30	20	M 8	8	25
TBp 3030	30	30	M 8	8	25
TBp 4030	40	30	M 8	8	25
TBp 4040	40	40	M 8	8	25
TBp 5020	50	20	M 10	10	25
TBp 5030	50	30	M 10	10	25
TBp 5035	50	35	M 10	10	25
TBp 5040	50	40	M 10	10	25
TBp 5050	50	50	M 10	10	25
TBp 6025	60	25	M 12	12	25
TBp 6030	60	30	M 12	12	25
TBp 6040	60	40	M 12	12	25
TBp 7045	70	45	M 12	12	25
TBp 10050	100	50	M 16	16	25

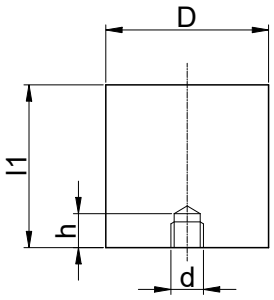

TCp SINGLE BOLT WEDGE/ Washer



Material Natural Rubber
Metal Zinc-Coated
Hardness 70 ±5 Shore
Temperature Resistance -20°C/+ 80°C

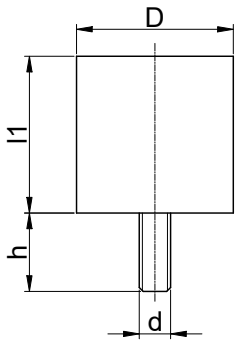

Product Code	D	l1	d	h	Pckg
TCp 1508	15	8	M 4	10	25
TCp 1515	15	15	M 4	10	25
TCp 1520	15	20	M 4	10	25
TCp 2010	20	10	M 6	15	25
TCp 2015	20	15	M 6	15	25
TCp 2020	20	20	M 6	15	25
TCp 2025	20	25	M 6	15	25
TCp 2030	20	30	M 6	15	25
TCp 2510	25	10	M 6	18	25
TCp 2515	25	15	M 6	18	25
TCp 2520	25	20	M 6	18	25
TCp 2525	25	25	M 6	18	25
TCp 3015	30	15	M 8	20	25
TCp 3020	30	20	M 8	20	25
TCp 3025	30	25	M 8	20	25
TCp 3030	30	30	M 8	20	25
TCp 3040	30	40	M 8	20	25
TCp 4020	40	20	M 8	20	25
TCp 4025	40	25	M 8	20	25
TCp 4030	40	30	M 8	20	25
TCp 4040	40	40	M 8	20	25
TCp 4525	45	25	M 8	20	25
TCp 4535	45	35	M 8	20	25
TCp 5020	50	20	M 10	28	25
TCp 5025	50	25	M 10	28	25
TCp 5030	50	30	M 10	28	25
TCp 5035	50	35	M 10	28	25
TCp 5040	50	40	M 10	28	25
TCp 5045	50	45	M 10	28	25
TCp 5050	50	50	M 10	28	25
TCp 6030	60	30	M 12	32	25
TCp 6035	60	35	M 12	32	25
TCp 6040	60	40	M 12	32	25
TCp 7035	70	35	M 12	37	25
TCp 7040	70	40	M 12	37	25
TCp 7045	70	45	M 12	37	25
TCp 7525	75	25	M 12	37	25
TCp 7540	75	40	M 12	37	25
TCp 7550	75	50	M 12	37	25
TCp 7555	75	55	M 12	37	25
TCp 7570	75	70	M 12	37	25
TCp 10040	100	40	M 16	42	25
TCp 10050	100	50	M 16	42	25
TCp 10055	100	55	M 16	42	25
TCp 10060	100	60	M 16	42	25
TCp 10075	100	75	M 16	42	25
TCp 15050	150	50	M 20	42	25

***Please inquire about prices.**

TKCp ANNULAR RUBBER MOUND / Bushed

Product Code	D	l1	d	h	Pckg
TKCp 11050	110	50	12	30	10
TKCp 110	110	100	12	30	10
TKCp 150	150	105	12	30	10
TKCp 160	160	75	12	30	10
TKCp 178	178	130	14	30	10



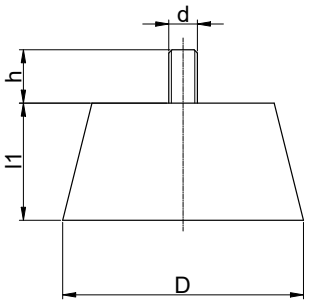

MaterIal Natural Rubber
Metal ZInc Coated
Hardness 70 ±5 Shore
Temperature Reslstant -20°C/+ 80°C

TMCCp ROLLER RUBBER MOUND / Double Bolted

Product Code	D	l1	d	h	Pckg
TMCCp 80	80	60	12	40	25
TMCCp 110	110	60	16	50	25
TMCCp 125	125	60	16	50	25



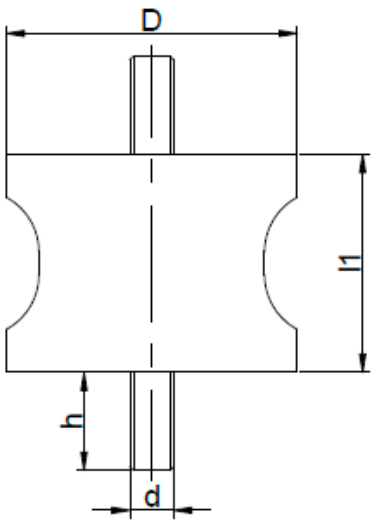

MaterIal Natural Rubber
Metal ZInc Coated
Hardness 70 ±5 Shore
Temperature Reslstant -20°C/+ 80°C

TCCd

ANTI VIBRATION RUBBER MOUND

Product Code	L	L1	H	h	d	Pckg
TCCd 150	150	103	12	78	M16	1



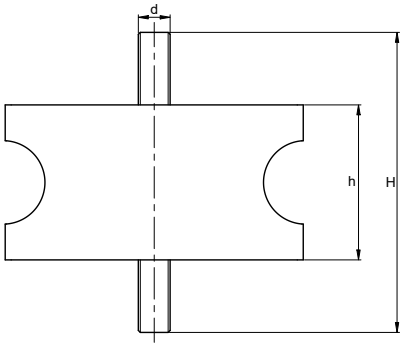

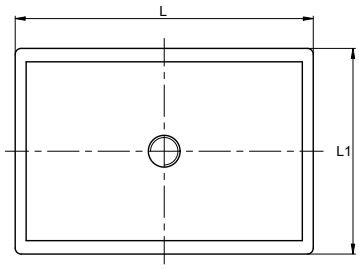

Material Natural Rubber
Metal Zinc Coated
Hardness 70 ±5 Shore
Temperature Resistant -20°C/+ 80°C

YT FLOOR WEDGE

Product Code	D-5	d	H-3	h	kg	Pckg
YT 60/1	60	M8	42,5	15	25	10
YT 70/1	70	M8	45	15	50	10
YT 110/1	110	M10	50	20	150	10



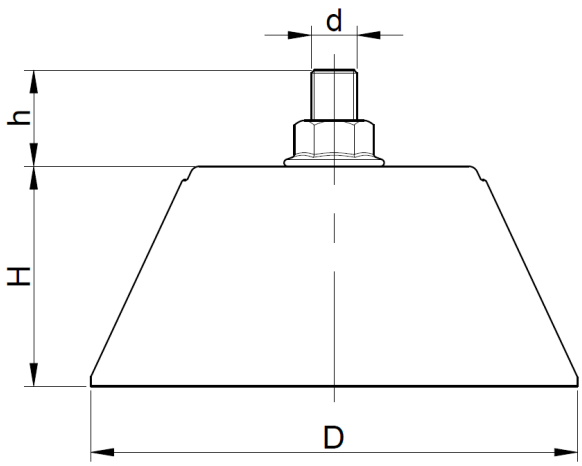

KT2 AIR CONDITIONING BRACKET

Product Code	AA	L	h	d	Pckg
KT2 35/2	35	29	15	M8	4 Teams
KT2 40/2	40	29	15	M8	4 Teams



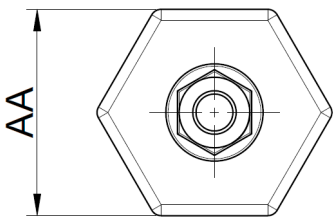

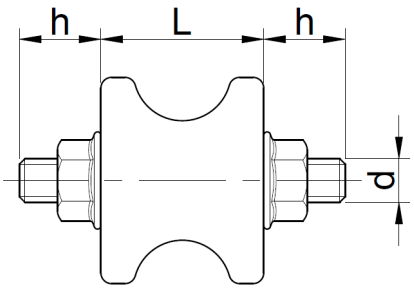

GCBD CLEVIS POINTS



Product Code	D	L	L1	SW	Pckg
GCBD M6X1	M6X1	9	6	7	100
GCBD M8X1	M8X1	9,5	6,5	9	100
GCBD M10X1	M10X1	9,5	6,5	11	100
GCBD 1/8”	1/8”	9,5	6,5	11	100
GCBD 1/4”	1/4”	14	9,5	14	100

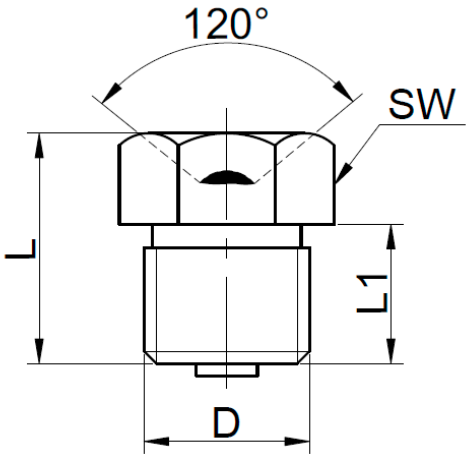

GD CLEVIS POINTS



Product Code	D	L	L1	SW	Pckg
GD M6X1	M6X1	15	5,5	7	100
GD M8X1	M8X1	15	5,5	9	100
GD M10X1	M10X1	15	5,5	11	100

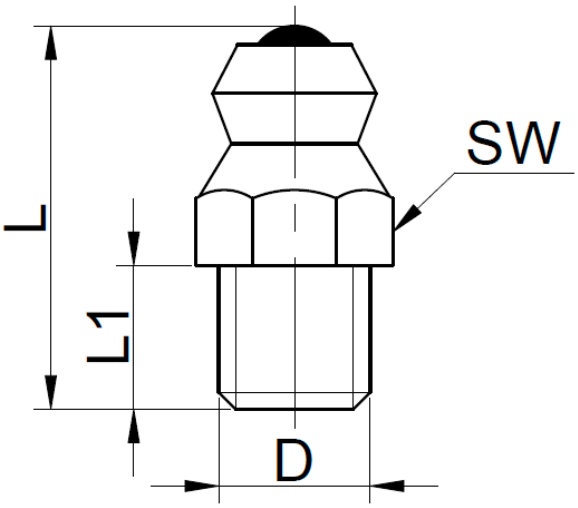

G45 BALL POINTS 45°



Product Code	A	D	L	L1	SW	Pckg
G45 M6X1	10,5	M6X1	23,5	5,5	9	100
G45 M8X1	10,5	M8X1	23,5	5,5	9	100
G45 M10X1	11,5	M10X1	25	5,5	11	100

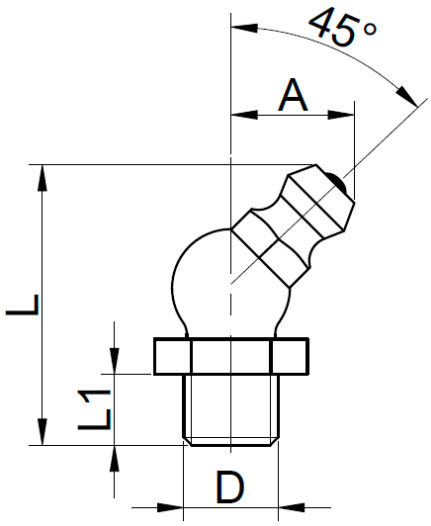

G90 BALL POINTS 90°



Product Code	A	D	L	L1	SW	Pckg
G90 M6X1	13	M6X1	18	5,5	9	100
G90 M8X1	13	M8X1	18	5,5	9	100
G90 M10X1	14	M10X1	20	5,5	11	100

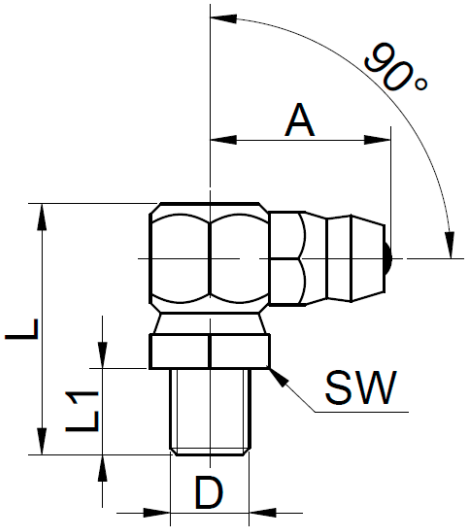

BC BALL - AND - SOCKET JOINT



Product Code	d	E	E1	d1	h	T	t	H	H1	pckg
BC M5 20	M5	20	26	9	10	19	5	10	5,3	25
BC M5 30	M5	30	36	9	10	29	5	10	5,3	25
BC M6 24	M6	24	31	10	12	23	6	12	6,3	25
BC M6 36	M6	36	43	10	12	35	6	12	6,3	25
BC M8 32	M8	32	42	14	16	31	8	16	8,3	25
BC M8 48	M8	48	58	14	16	47	8	16	8,3	25
BC M 1040	M10	40	52	18	20	39	10	20	10,3	25
BC M 1060	M10	60	72	18	20	59	10	20	10,3	25

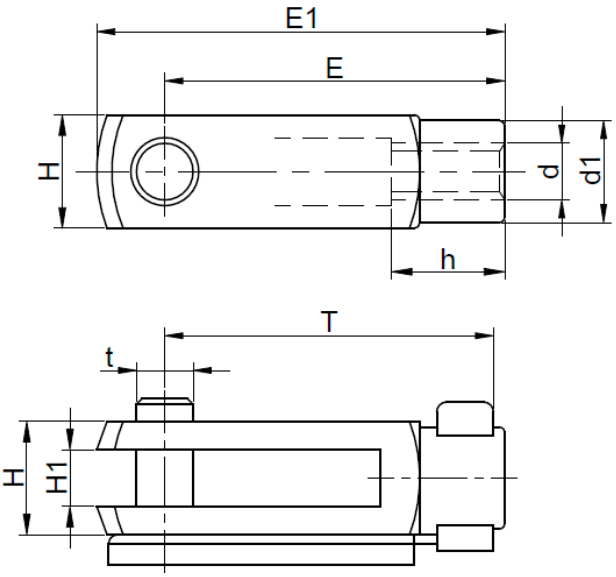

KMM SPHERICAL CONNECTION



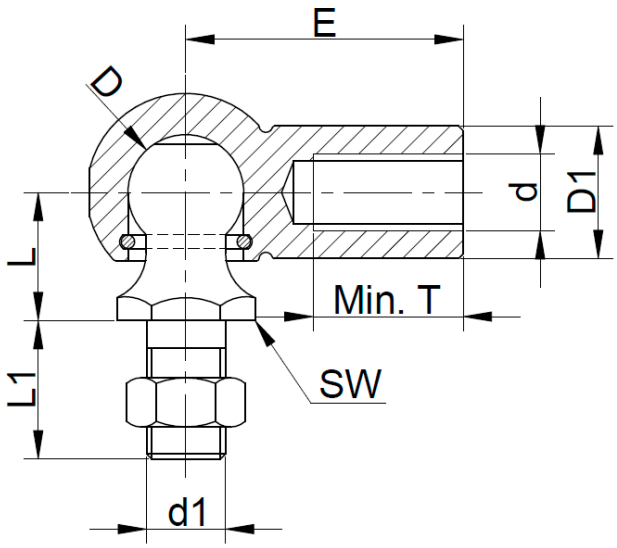

Product Code	d	E	d1	D	D1	L	L1	T	SW	pckg
KMM M522M5	M5	22	M5	8	8	9	10,2	10,2	8	25
KMM M625M6	M6	25	M6	10	10	11	13	11,5	10	25
KMM M830M8	M8	30	M8	13	13	13	16	15	13	25
KMM M1035M10	M10	35	M10	16	16	16	19	15	17	25
KMM M1235M12	M12	35	12	16	16,3	16	20	15,5	17	25

RAIL TELESCOPIC



Rails are sold as a set.

Product Code	H	h	T	L	Load Capacity (Kg)	Pckg
RAY 45400	45	25	360	400	155	2
RAY 45450	45	25	410	450	150	2
RAY 45500	45	25	460	500	145	2
RAY 45550	45	25	510	550	140	2
RAY 45600	45	25	560	600	135	2
RAY 45650	45	25	610	650	130	2
RAY 45 700	45	25	660	700	125	2
RAY 45 750	45	25	710	750	120	2
RAY 45 800	45	25	760	800	115	2
RAY 45 850	45	25	810	850	105	2
RAY 45 900	45	25	860	900	95	2
RAY 45 950	45	25	910	950	85	2
RAY 45 1000	45	25	960	1000	75	2

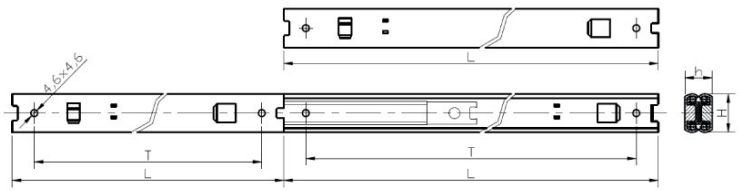

RAIL TELESCOPIC



Product Code	H	h	L	Load Capacity (Kg)	Pckg
RAY 50300	50	13	300	120	2
RAY 50350	50	13	350	115	2
RAY 50400	50	13	400	110	2
RAY 50450	50	13	450	105	2
RAY 50500	50	13	500	100	2
RAY 50550	50	13	550	95	2
RAY 50600	50	13	600	90	2
RAY 50650	50	13	650	85	2
RAY 50700	50	13	700	80	2
RAY 50750	50	13	750	75	2
RAY 50800	50	13	800	70	2

Rails are sold as a set.

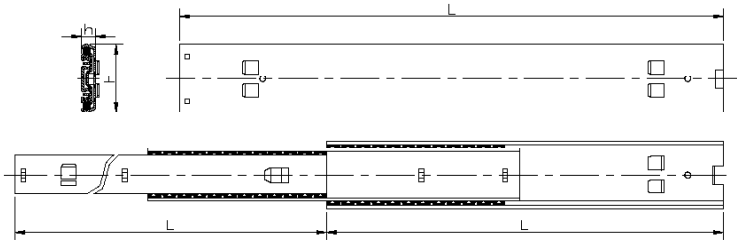

RAIL TELESCOPIC



Product Code	H	h	L	Load Capacity (Kg)	Pckg
RAY 55300	55	17	300	130	2
RAY 55350	55	17	350	125	2
RAY 55400	55	17	400	120	2
RAY 55450	55	17	450	115	2
RAY 55500	55	17	500	110	2
RAY 55550	55	17	550	105	2
RAY 55600	55	17	600	100	2
RAY 55650	55	17	650	95	2
RAY 55700	55	17	700	90	2
RAY 55750	55	17	750	85	2
RAY 55800	55	17	800	80	2
RAY 55850	55	17	850	75	2
RAY 55900	55	17	900	70	2
RAY 55950	55	17	950	65	2
RAY 551000	55	17	1000	60	2

Rails are sold as a set.

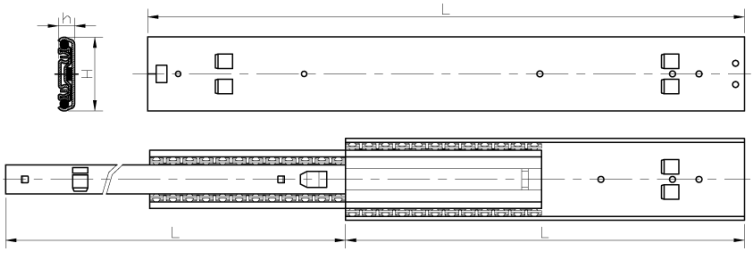

NOTES

EMES®

Emes Endustriyel Makine
Ekipmanlari San. Ve Tic. A.S

+90 216 304 06 79
+90 216 309 91 48
info@emesteker.com
www.emesteker.com
Orta Mah. 30 Agustos Cad. No:61 34956
Orhanlı-Tuzla, Istanbul/Türkiye